SafeMed Industry - Tracheotomy

16-108-13
Heckerman
11.5cm 4 1/2"
Tracheotomy Trocar
7,5 mm Ø
with hollow handle

16-110-13
Heckerman
11.5cm 4 1/2"
Tracheotomy Trocar
10 mm Ø
with hollow handle

SafeMed Industry
Muslim Masjid Street,
Opp Muslim Masjid, Roras Road,
Muzaffar Pur, Sialkot 51310 Pakistan.

Phone: +92 523572570
Mobile: +92 314 726 202
WhatsApp: +92 314 726 202

Website: Safe-Med.Co
E-Mail: Sales@Safe-Med.Co

16-113-14
Laborde
14cm 5 1/2"
Tracheal Dilator

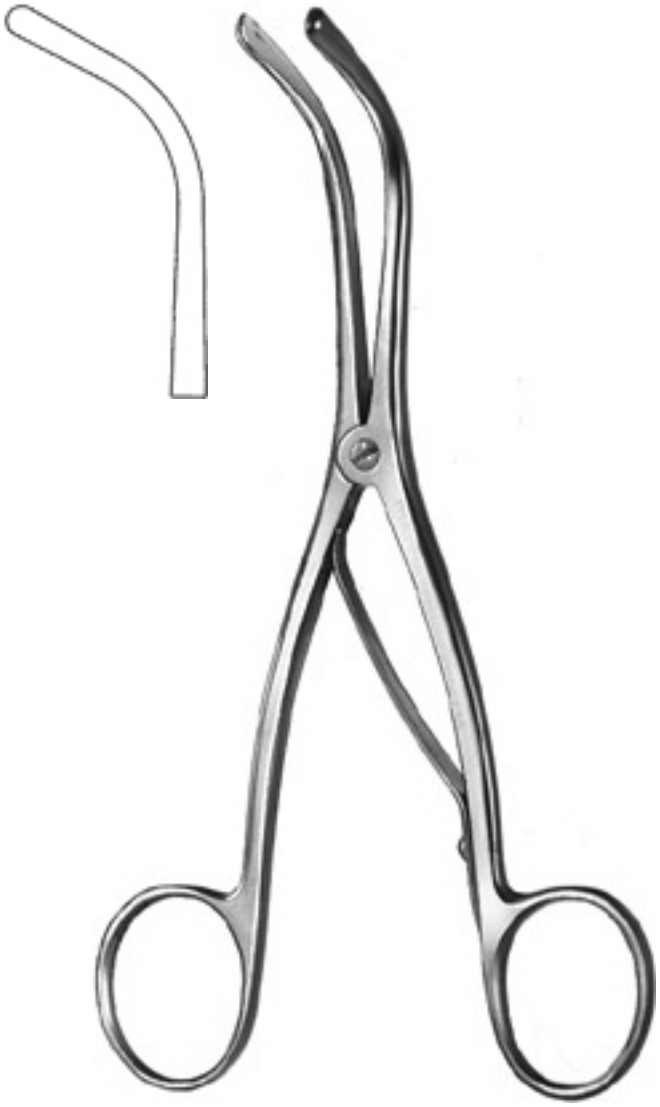

16-115-14
Trousseau
14.5cm 5 3/4"
Tracheal Dilator

SafeMed Industry
Muslim Masjid Street,
Opp Muslim Masjid, Roras Road,
Muzaffar Pur, Sialkot 51310 Pakistan.

Phone: +92 523572570
Mobile: +92 314 726 202
WhatsApp: +92 314 726 202

Website: Safe-Med.Co
E-Mail: Sales@Safe-Med.Co

SAFEMED INSDUSTRY

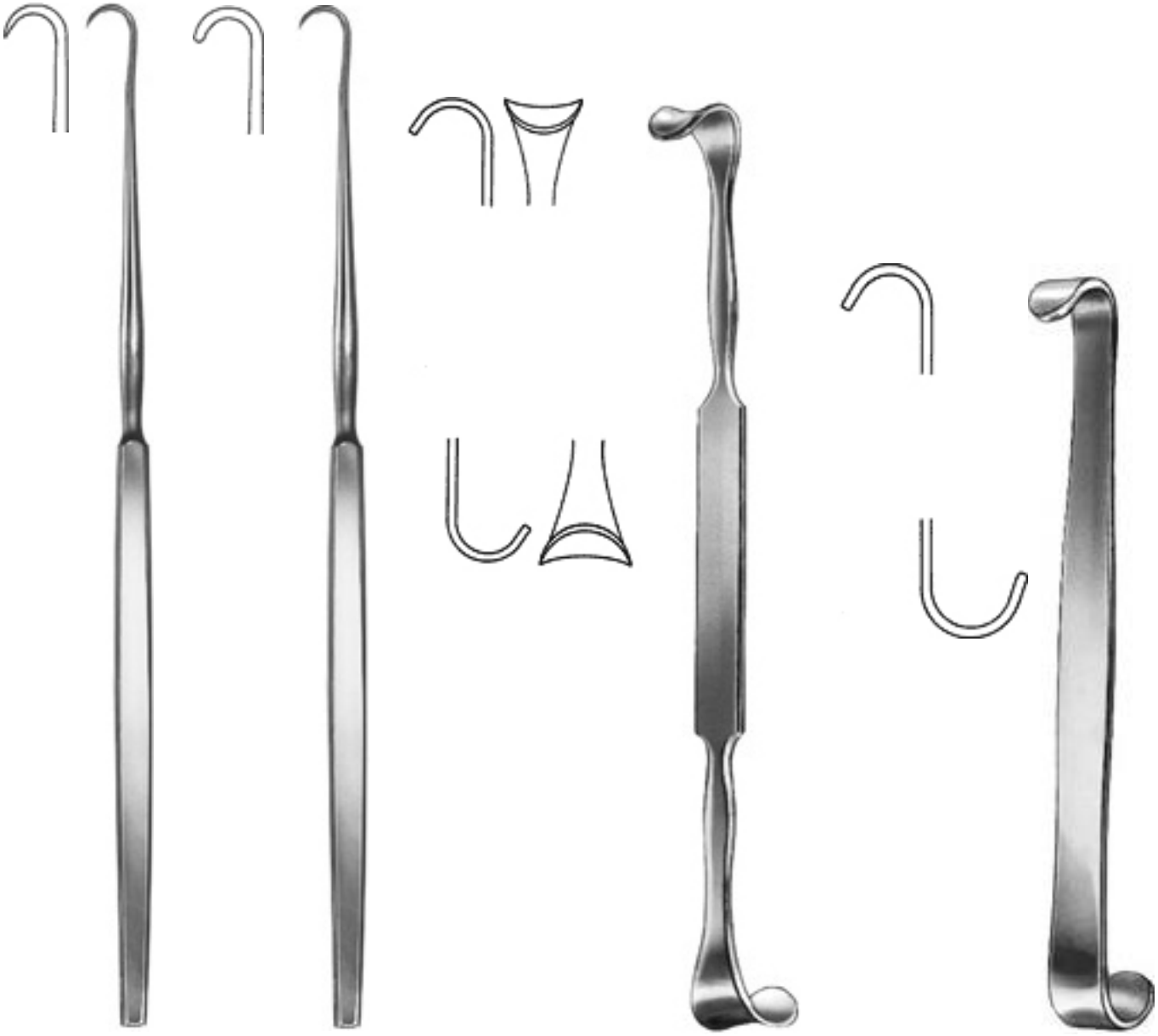

16-125-16
Iteron
17cm 6 3/4"
Tracheal Hook
sharp

16-127-16
Iteron
17cm 6 3/4"
Tracheal Hook
blunt

16-143-13
Rose
13.5cm 5 1/4"
Tracheal Hook

16-145-11
Lure
11cm 4 1/2"
Tracheal Hook

SafeMed Industry
Muslim Masjid Street,
Opp Muslim Masjid, Roras Road,
Muzaffar Pur, Sialkot 51310 Pakistan.

Phone: +92 523572570
Mobile: +92 314 726 202
WhatsApp: +92 314 726 202

Website: Safe-Med.Co
E-Mail: Sales@Safe-Med.Co

SAFEMED INSDUSTRY

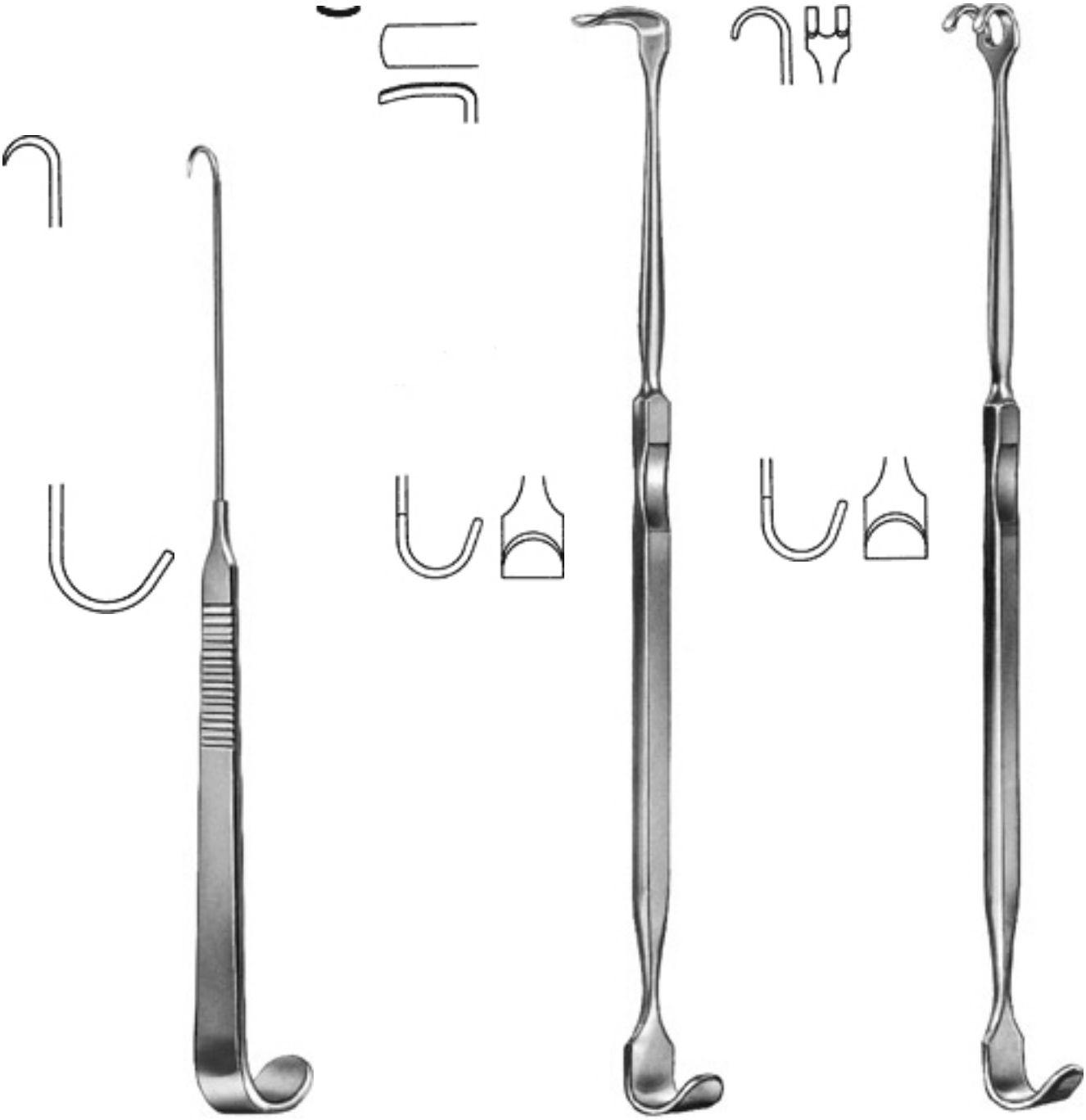

16-149-15
15cm 6"
Tracheal Hook
sharp

16-151-17
Lukens
17.5cm 7"
Thymus Retractor
blunt

16-155-17
Jackson
18cm 7"
Tracheal Hook

SafeMed Industry
Muslim Masjid Street,
Opp Muslim Masjid, Roras Road,
Muzaffar Pur, Sialkot 51310 Pakistan.

Phone: +92 523572570
Mobile: +92 314 726 202
WhatsApp: +92 314 726 202

Website: Safe-Med.Co
E-Mail: Sales@Safe-Med.Co

SAFEMED INSDUSTRY

16-342-26
26cm 10 1/4
Cleaning Brush
for tracheal tubes
head of brush 12 mm Ø
Cleaning Brush

16-411-15
Kocher
16.5cm 6 1/2"
Goiter Enucleator

16-413-15
Kocher
16.5cm 6 1/2"
Goiter Enucleator
with eye

16-429-21
Hofmeister
20.5cm 8"
Goiter Enucleator

SafeMed Industry
Muslim Masjid Street,
Opp Muslim Masjid, Roras Road,
Muzaffar Pur, Sialkot 51310 Pakistan.

Phone: +92 523572570
Mobile: +92 314 726 202
WhatsApp: +92 314 726 202

Website: Safe-Med.Co
E-Mail: Sales@Safe-Med.Co

SAFEMED INSDUSTRY

16-449-15
Lahey
15.5cm 6"
Goiter Grasping Forceps
3:3 teeth

16-449-20
Lahey20cm 8"
Goiter Grasping Forceps
3:3 teeth

SafeMed Industry
Muslim Masjid Street,
Opp Muslim Masjid, Roras Road,
Muzaffar Pur, Sialkot 51310 Pakistan.

Phone: +92 523572570
Mobile: +92 314 726 202
WhatsApp: +92 314 726 202

Website: Safe-Med.Co
E-Mail: Sales@Safe-Med.Co

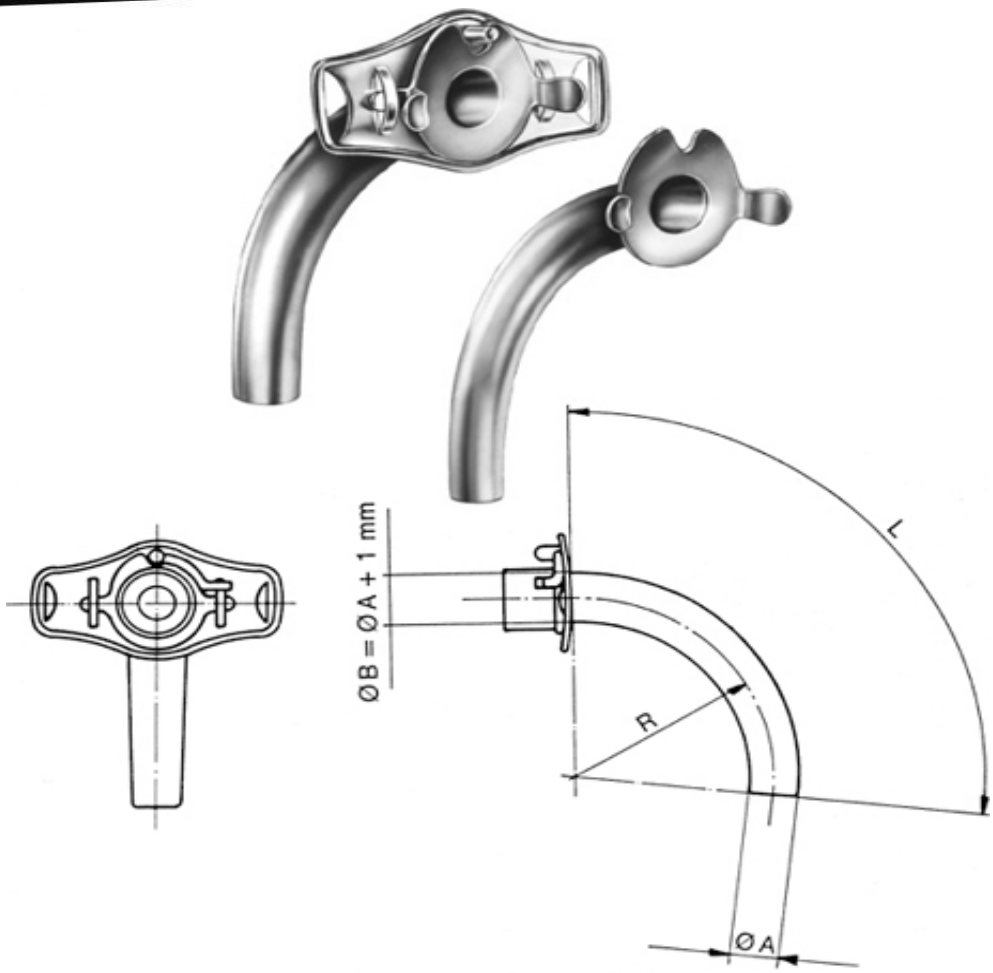

16-500-04
Lure Tracheal Tube Ø 4 mm length of tube 45 mm outer tube closed inner tube closed silver
16-500-05
Lure Tracheal Tube Ø 5 mm length of tube 50 mm outer tube closed inner tube closed silver
16-500-06
Lure Tracheal Tube Ø 6 mm length of tube 55 mm outer tube closed inner tube closed silver
16-500-07
Lure Tracheal Tube Ø 7 mm length of tube 60 mm outer tube closed inner tube closed silver
16-500-08
Lure Tracheal Tube Ø 8 mm length of tube 65 mm outer tube closed inner tube closed silver
16-500-09
Lure Tracheal Tube Ø 9 mm length of tube 70 mm outer tube closed inner tube closed silver
16-500-10
Lure Tracheal Tube Ø 10 mm length of tube 75 mm outer tube closed inner tube closed silver
16-500-11
Lure Tracheal Tube Ø 11 mm length of tube 80 mm outer tube closed inner tube closed silver
16-500-12
Lure Tracheal Tube Ø 12 mm length of tube 85 mm outer tube closed inner tube closed silver
16-500-13
Lure Tracheal Tube Ø 13 mm length of tube 90 mm outer tube closed inner tube closed silver

SafeMed Industry
Muslim Masjid Street,
Opp Muslim Masjid, Roras Road,
Muzaffar Pur, Sialkot 51310 Pakistan.

Phone: +92 523572570
Mobile: +92 314 726 202
WhatsApp: +92 314 726 202

Website: Safe-Med.Co
E-Mail: Sales@Safe-Med.Co

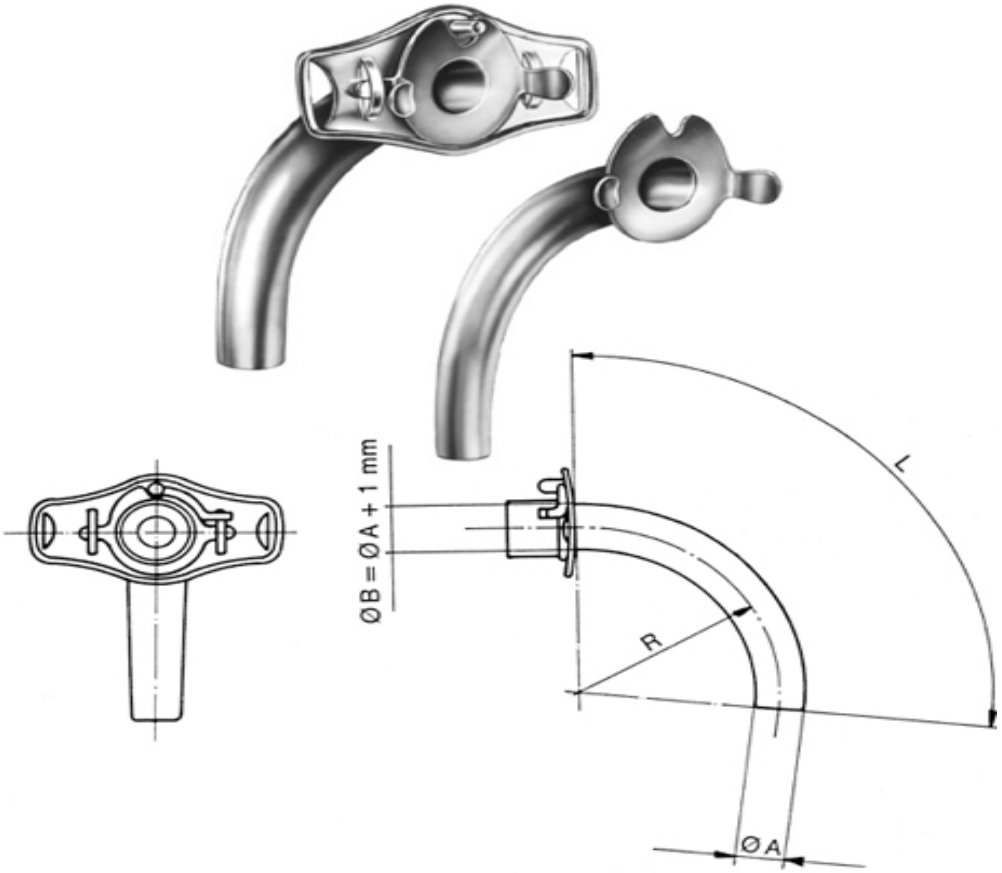

16-501-04
Lure Tracheal Tube Ø 4 mm length of tube 45 mm outer tube closed inner tube closed German silver
16-501-05
Lure Tracheal Tube Ø 5 mm length of tube 50 mm outer tube closed inner tube closed German silver
16-501-06
Lure Tracheal Tube Ø 6 mm length of tube 55 mm outer tube closed inner tube closed German silver
16-501-07
Lure Tracheal Tube Ø 7 mm length of tube 60 mm outer tube closed inner tube closed German silver
16-501-08
Lure Tracheal Tube Ø 8 mm length of tube 65 mm outer tube closed inner tube closed German silver
16-501-09
Lure Tracheal Tube Ø 9 mm length of tube 70 mm outer tube closed inner tube closed German silver
16-501-10
Lure Tracheal Tube Ø 10 mm length of tube 75 mm outer tube closed inner tube closed German silver
16-501-11
Lure Tracheal Tube Ø 11 mm length of tube 80 mm outer tube closed inner tube closed German silver
16-501-12
Lure Tracheal Tube Ø 12 mm length of tube 85 mm outer tube closed inner tube closed German silver
16-501-13
Lure Tracheal Tube Ø 13 mm length of tube 90 mm outer tube closed inner tube closed German silver

SafeMed Industry
Muslim Masjid Street,
Opp Muslim Masjid, Roras Road,
Muzaffar Pur, Sialkot 51310 Pakistan.

Phone: +92 523572570
Mobile: +92 314 726 202
WhatsApp: +92 314 726 202

Website: Safe-Med.Co
E-Mail: Sales@Safe-Med.Co

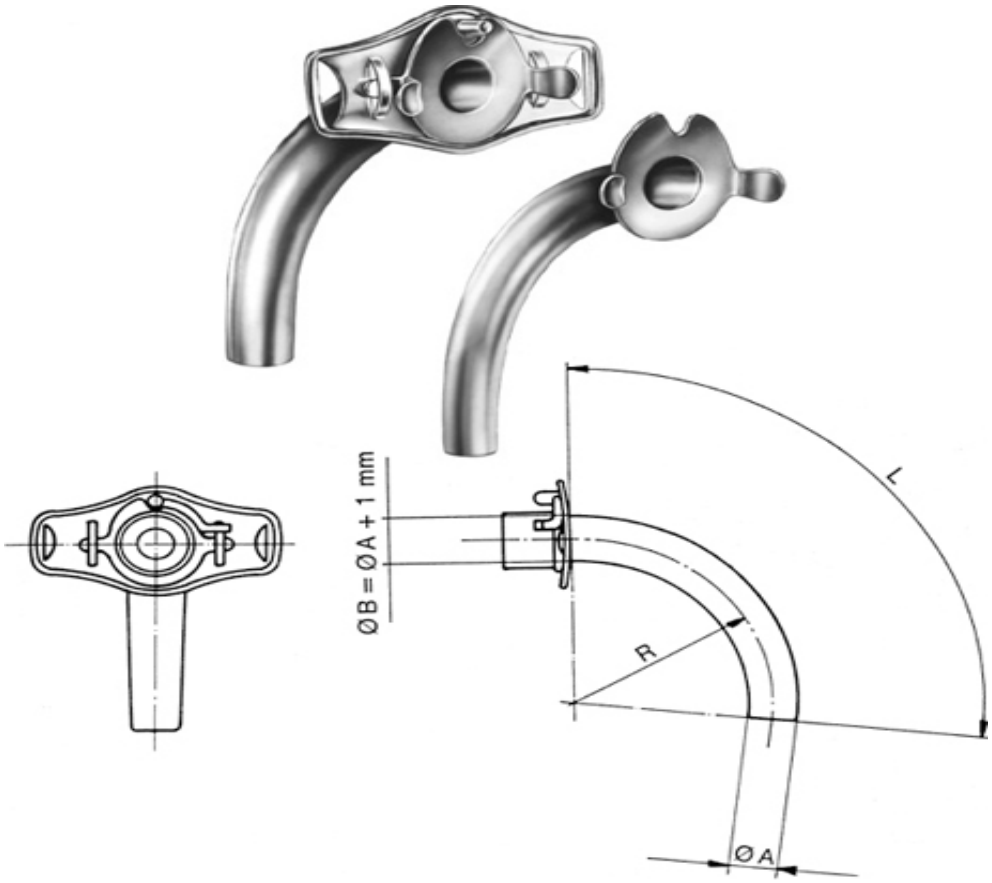

16-502-04
Lure Tracheal Tube Ø 4 mm length of tube 45 mm outer tube closed inner tube closed
16-502-05
Lure Tracheal Tube Ø 5 mm length of tube 50 mm outer tube closed inner tube closed
16-502-06
Lure Tracheal Tube Ø 6 mm length of tube 55 mm outer tube closed inner tube closed
16-502-07
Lure Tracheal Tube Ø 7 mm length of tube 60 mm outer tube closed inner tube closed
16-502-08
Lure Tracheal Tube Ø 8 mm length of tube 65 mm outer tube closed inner tube closed
16-502-09
Lure Tracheal Tube Ø 9 mm length of tube 70 mm outer tube closed inner tube closed
16-502-10
Lure Tracheal Tube Ø 10 mm length of tube 75 mm outer tube closed inner tube closed
16-502-11
Lure Tracheal Tube Ø 11 mm length of tube 80 mm outer tube closed inner tube closed
16-502-12
Lure Tracheal Tube Ø 12 mm length of tube 85 mm outer tube closed inner tube closed
16-502-13
Lure Tracheal Tube Ø 13 mm length of tube 90 mm outer tube closed inner tube closed

SafeMed Industry
Muslim Masjid Street,
Opp Muslim Masjid, Roras Road,
Muzaffar Pur, Sialkot 51310 Pakistan.

Phone: +92 523572570
Mobile: +92 314 726 202
WhatsApp: +92 314 726 202

Website: Safe-Med.Co
E-Mail: Sales@Safe-Med.Co

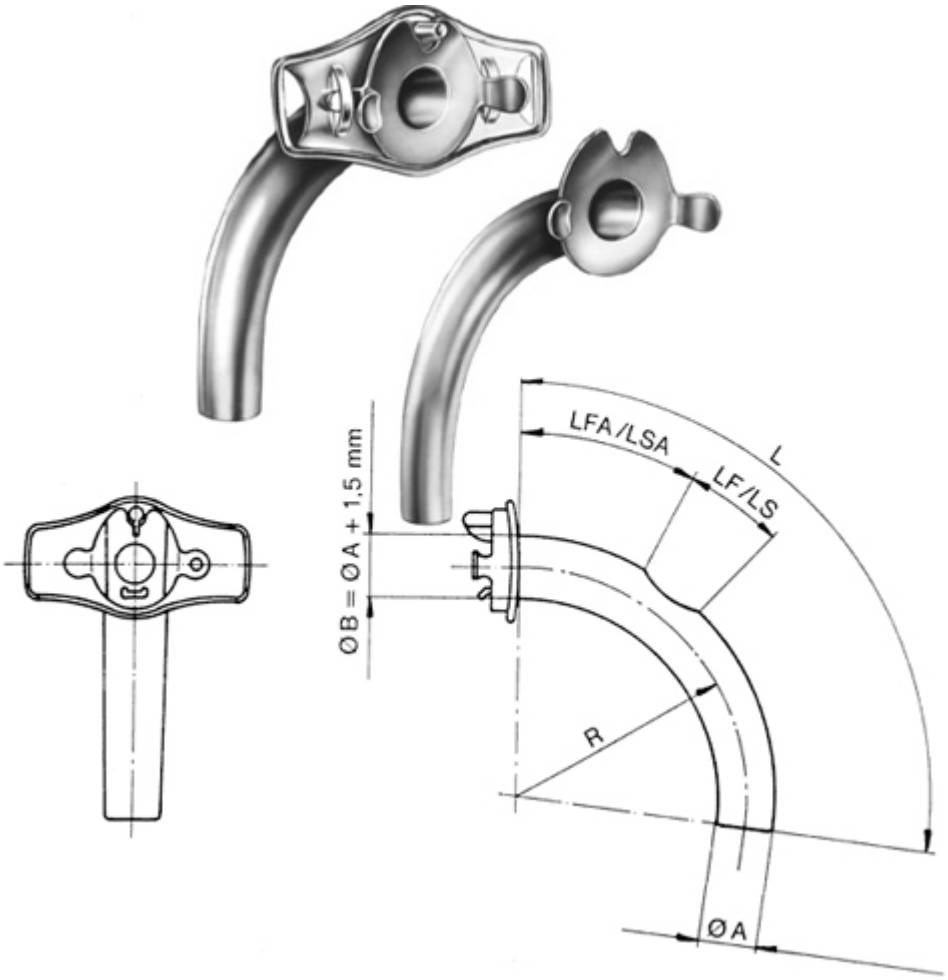

16-504-07
Lure Tracheal Tube Ø 7 mm length of tube 60 mm outer tube window inner tube window silver
16-504-08
Lure Tracheal Tube Ø 8 mm length of tube 65 mm outer tube window inner tube window silver
16-504-09
Lure Tracheal Tube Ø 9 mm length of tube 70 mm outer tube window inner tube window silver
16-504-10
Lure Tracheal Tube Ø 10 mm length of tube 75 mm outer tube window inner tube window silver
16-504-11
Lure Tracheal Tube Ø 11 mm length of tube 80 mm outer tube window inner tube window silver
16-504-12
Lure Tracheal Tube Ø 12 mm length of tube 85 mm outer tube window inner tube window silver
16-504-13
Lure Tracheal Tube Ø 13 mm length of tube 90 mm outer tube window inner tube window silver

SafeMed Industry
Muslim Masjid Street,
Opp Muslim Masjid, Roras Road,
Muzaffar Pur, Sialkot 51310 Pakistan.

Phone: +92 523572570
Mobile: +92 314 726 202
WhatsApp: +92 314 726 202

Website: Safe-Med.Co
E-Mail: Sales@Safe-Med.Co

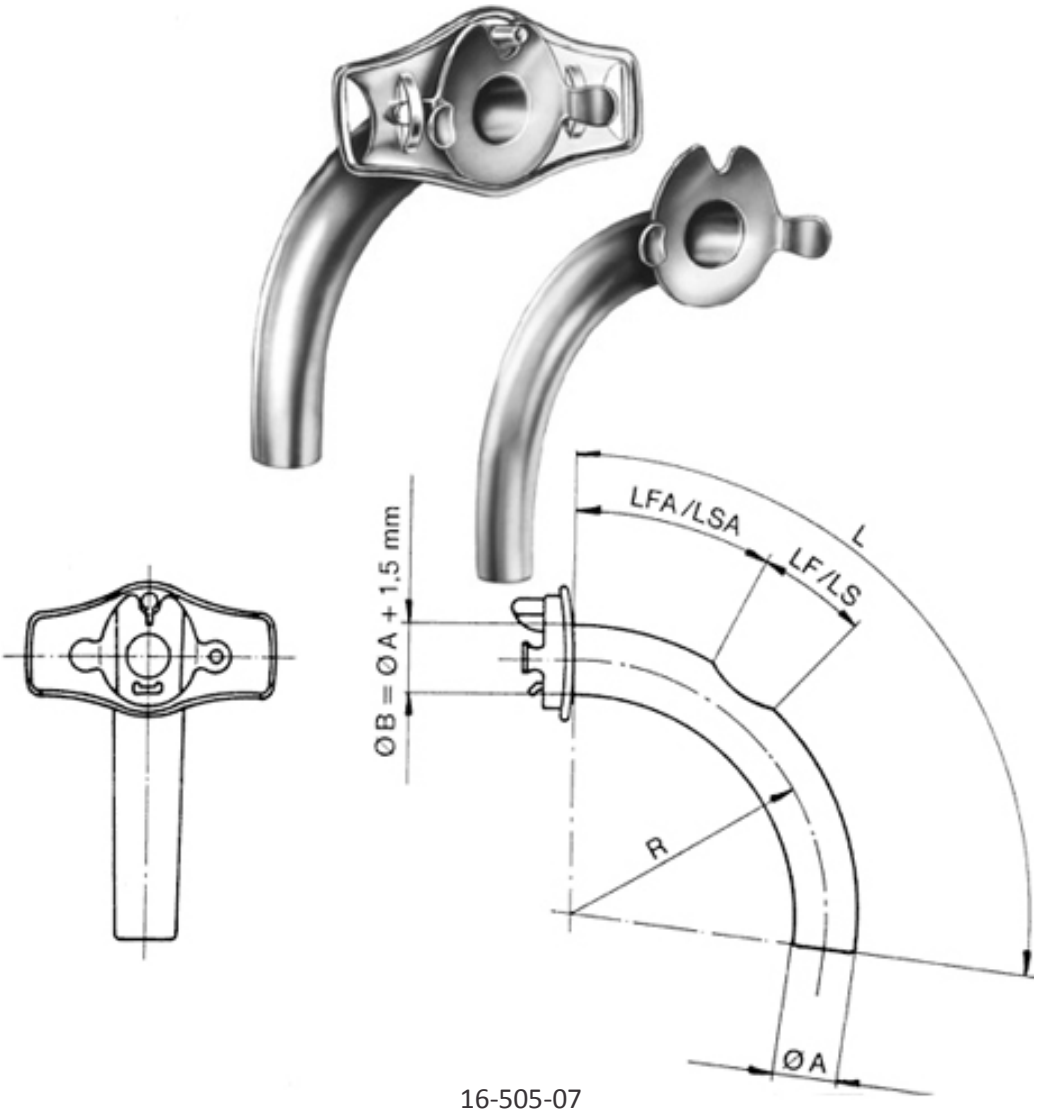

16-505-07
Lure Tracheal Tube Ø 7 mm length of tube 60 mm outer tube window inner tube window German silver
16-505-08
Lure Tracheal Tube Ø 8 mm length of tube 65 mm outer tube window inner tube window German silver
16-505-09
Lure Tracheal Tube Ø 9 mm length of tube 70 mm outer tube window inner tube window German silver
16-505-10
Lure Tracheal Tube Ø 10 mm length of tube 75 mm outer tube window inner tube window German silver
16-505-11
Lure Tracheal Tube Ø 11 mm length of tube 80 mm outer tube window inner tube window German silver
16-505-12
Lure Tracheal Tube Ø 12 mm length of tube 85 mm outer tube window inner tube window German silver
16-505-13
Lure Tracheal Tube Ø 13 mm length of tube 90 mm outer tube window inner tube window German silver

SafeMed Industry
Muslim Masjid Street,
Opp Muslim Masjid, Roras Road,
Muzaffar Pur, Sialkot 51310 Pakistan.

Phone: +92 523572570
Mobile: +92 314 726 202
WhatsApp: +92 314 726 202

Website: Safe-Med.Co
E-Mail: Sales@Safe-Med.Co

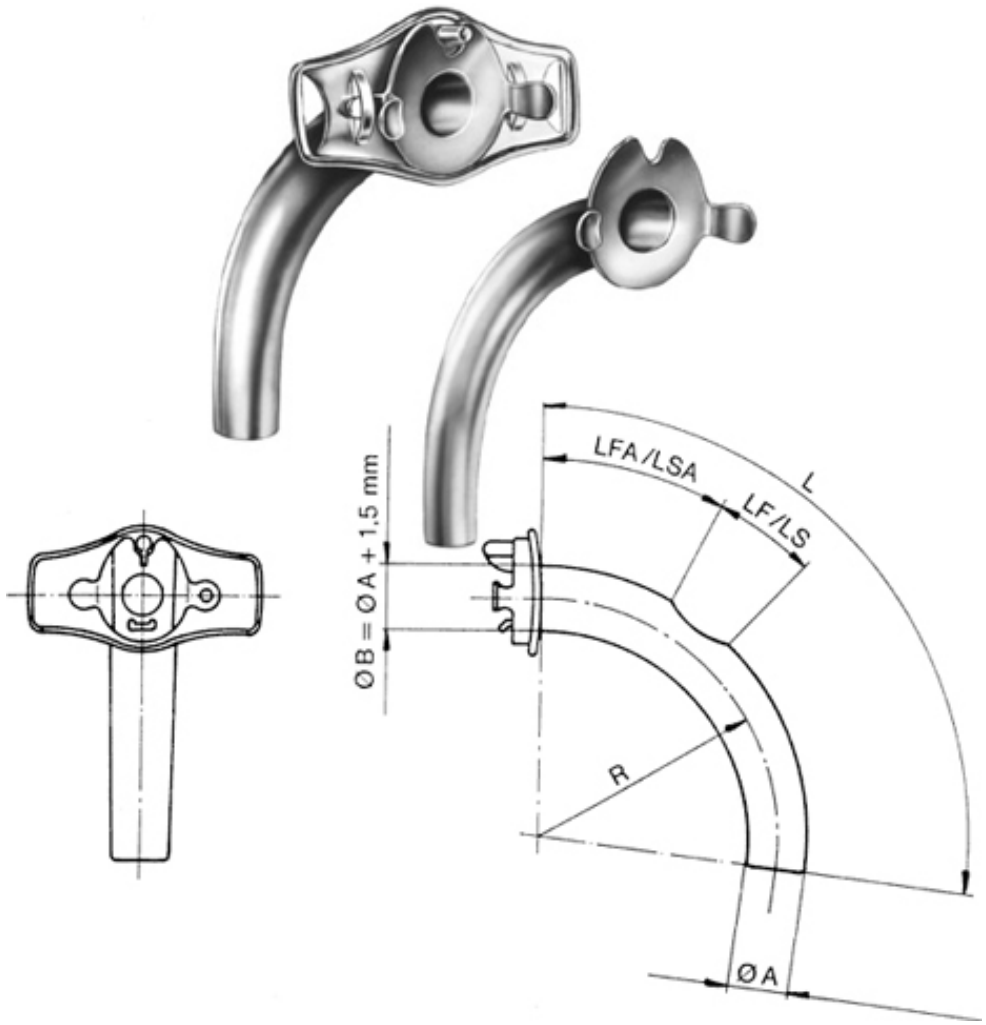

16-506-07
Lure Tracheal Tube Ø 7 mm length of tube 60 mm outer tube window inner tube window
16-506-08
Lure Tracheal Tube Ø 8 mm length of tube 65 mm outer tube window inner tube window
16-506-09
Lure Tracheal Tube Ø 9 mm length of tube 70 mm outer tube window inner tube window
16-506-10
Lure Tracheal Tube Ø 10 mm length of tube 75 mm outer tube window inner tube window
16-506-11
Lure Tracheal Tube Ø 11 mm length of tube 80 mm outer tube window inner tube window
16-506-12
Lure Tracheal Tube Ø 12 mm length of tube 85 mm outer tube window inner tube window
16-506-13
Lure Tracheal Tube Ø 13 mm length of tube 90 mm outer tube window inner tube window

SafeMed Industry
Muslim Masjid Street,
Opp Muslim Masjid, Roras Road,
Muzaffar Pur, Sialkot 51310 Pakistan.

Phone: +92 523572570
Mobile: +92 314 726 202
WhatsApp: +92 314 726 202

Website: Safe-Med.Co
E-Mail: Sales@Safe-Med.Co

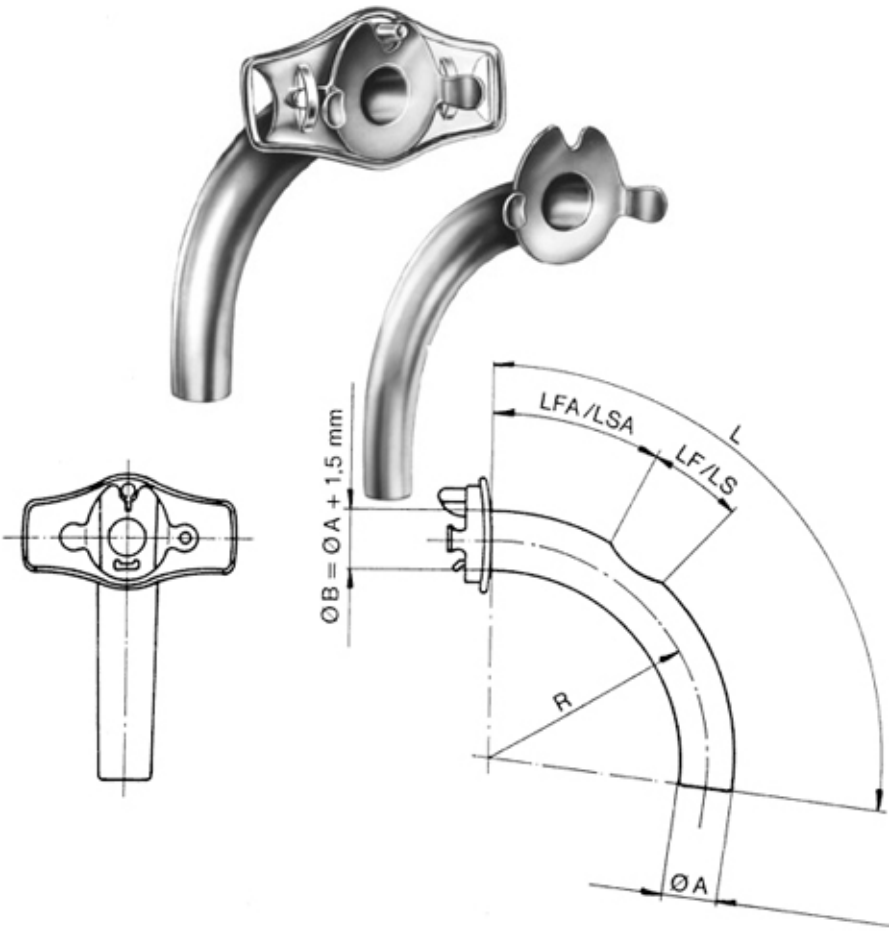

16-507-08
Lure Tracheal Tube 8 mm length of tube 95 mm outer tube window inner tube window silver
16-507-09
Lure Tracheal Tube 9 mm length of tube 95 mm outer tube window inner tube window silver
16-507-10
Lure Tracheal Tube 10 mm length of tube 95 mm outer tube window inner tube window silver
16-507-11
Lure Tracheal Tube 11 mm length of tube 95 mm outer tube window inner tube window silver
16-507-12
Lure Tracheal Tube 12 mm length of tube 95 mm outer tube window inner tube window silver
16-507-13
Lure Tracheal Tube 13 mm length of tube 95 mm outer tube window inner tube window silver

SafeMed Industry
Muslim Masjid Street,
Opp Muslim Masjid, Roras Road,
Muzaffar Pur, Sialkot 51310 Pakistan.

Phone: +92 523572570
Mobile: +92 314 726 202
WhatsApp: +92 314 726 202

Website: Safe-Med.Co
E-Mail: Sales@Safe-Med.Co

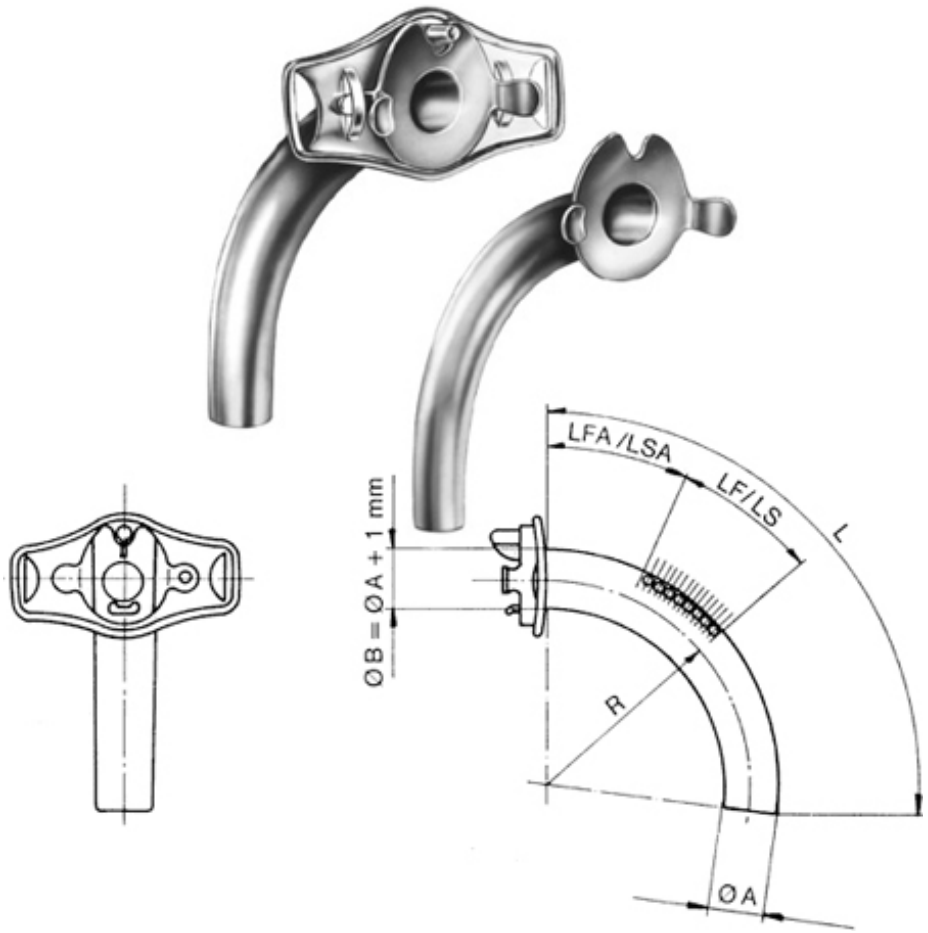

16-508-07
Lure Tracheal Tube Ø 7 mm length of tube 60 mm outer tube sieve inner tube window silver
16-508-08
Lure Tracheal Tube Ø 8 mm length of tube 65 mm outer tube sieve inner tube window silver
16-508-09
Lure Tracheal Tube Ø 9 mm length of tube 70 mm outer tube sieve inner tube window silver
16-508-10
Lure Tracheal Tube Ø 10 mm length of tube 75 mm outer tube sieve inner tube window silver
16-508-11
Lure Tracheal Tube Ø 11 mm length of tube 80 mm outer tube sieve inner tube window silver
16-508-12
Lure Tracheal Tube Ø 12 mm length of tube 85 mm outer tube sieve inner tube window silver
16-508-13
Lure Tracheal Tube Ø 13 mm length of tube 90 mm outer tube sieve inner tube window silver

SafeMed Industry
Muslim Masjid Street,
Opp Muslim Masjid, Roras Road,
Muzaffar Pur, Sialkot 51310 Pakistan.

Phone: +92 523572570
Mobile: +92 314 726 202
WhatsApp: +92 314 726 202

Website: Safe-Med.Co
E-Mail: Sales@Safe-Med.Co

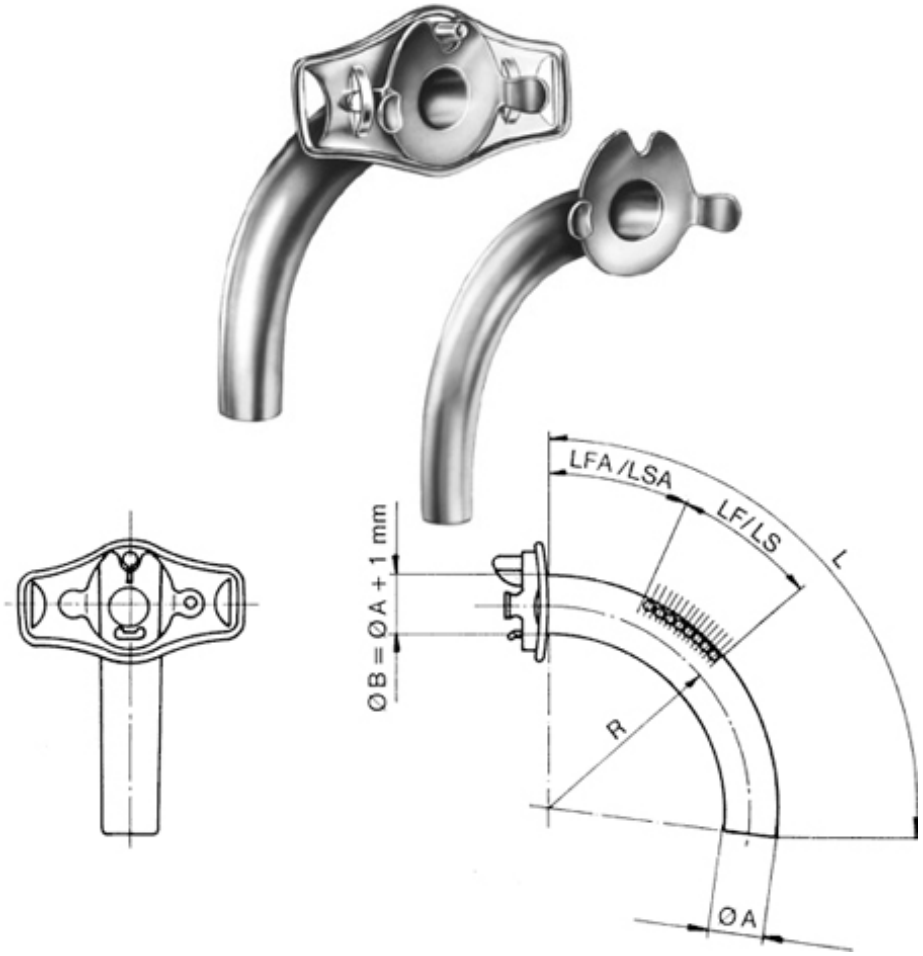

16-509-07
Lure Tracheal Tube 7 mm length of tube 60 mm outer tube sieve inner tube window German silver
16-509-08
Lure Tracheal Tube 8 mm length of tube 65 mm outer tube sieve inner tube window German silver
16-509-09
Lure Tracheal Tube 9 mm length of tube 70 mm outer tube sieve inner tube window German silver
16-509-10
Lure Tracheal Tube 10 mm length of tube 75 mm outer tube sieve inner tube window German silver
16-509-11
Lure Tracheal Tube 11 mm length of tube 80 mm outer tube sieve inner tube window German silver
16-509-12
Lure Tracheal Tube 12 mm length of tube 85 mm outer tube sieve inner tube window German silver
16-509-13
Lure Tracheal Tube 13 mm length of tube 90 mm outer tube sieve inner tube window German silver

SafeMed Industry
Muslim Masjid Street,
Opp Muslim Masjid, Roras Road,
Muzaffar Pur, Sialkot 51310 Pakistan.

Phone: +92 523572570
Mobile: +92 314 726 202
WhatsApp: +92 314 726 202

Website: Safe-Med.Co
E-Mail: Sales@Safe-Med.Co

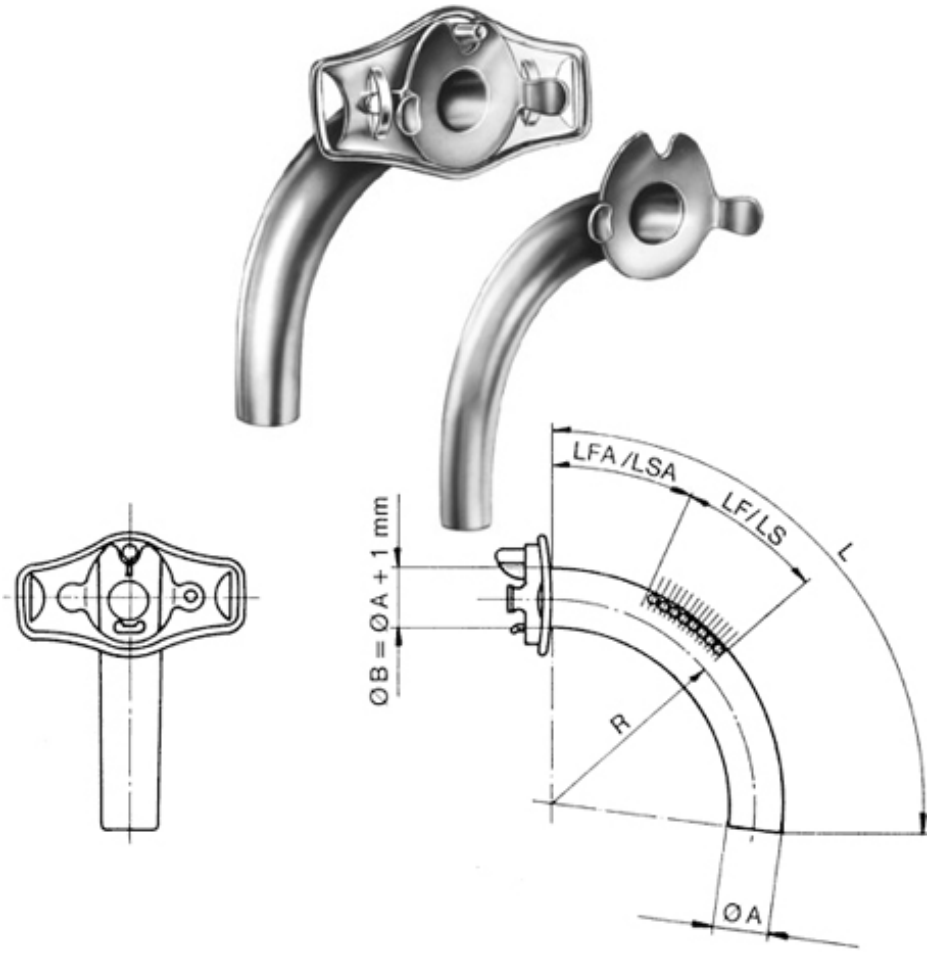

16-510-07
Lure Tracheal Tube Ø 7 mm length of tube 60 mm outer tube sieve inner tube window
16-510-08
Lure Tracheal Tube Ø 8 mm length of tube 65 mm outer tube sieve inner tube window
16-510-09
Lure Tracheal Tube Ø 9 mm length of tube 70 mm outer tube sieve inner tube window
16-510-10
Lure Tracheal Tube Ø 10 mm length of tube 75 mm outer tube sieve inner tube window
16-510-11
Lure Tracheal Tube Ø 11 mm length of tube 80 mm outer tube sieve inner tube window
16-510-12
Lure Tracheal Tube Ø 12 mm length of tube 85 mm outer tube sieve inner tube window
16-510-13
Lure Tracheal Tube Ø 13 mm length of tube 90 mm outer tube sieve inner tube window

SafeMed Industry
Muslim Masjid Street,
Opp Muslim Masjid, Roras Road,
Muzaffar Pur, Sialkot 51310 Pakistan.

Phone: +92 523572570
Mobile: +92 314 726 202
WhatsApp: +92 314 726 202

Website: Safe-Med.Co
E-Mail: Sales@Safe-Med.Co

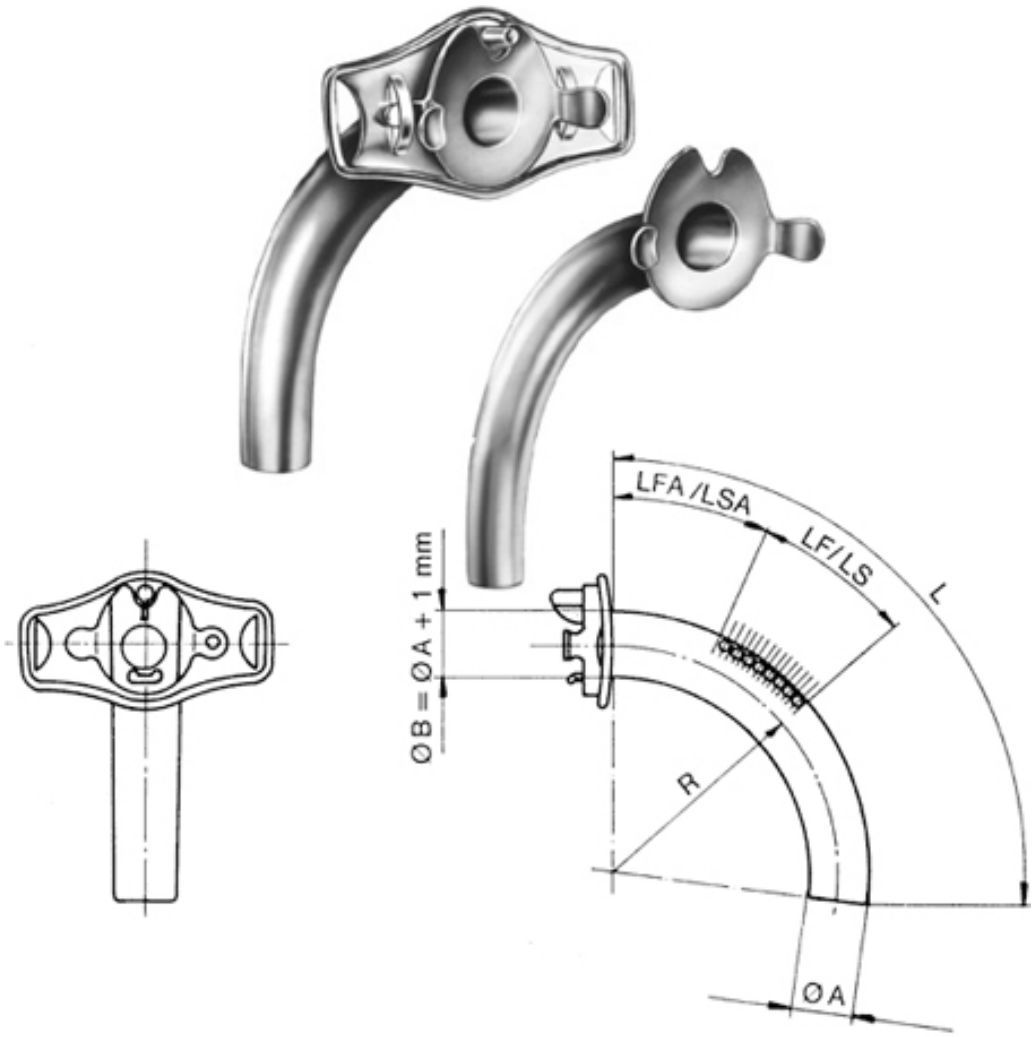

16-511-08
Lure Tracheal Tube Ø 8 mm length of tube 95 mm outer tube sieve inner tube window silver
16-511-09
Lure Tracheal Tube Ø 9 mm length of tube 95 mm outer tube sieve inner tube window silver
16-511-10
Lure Tracheal Tube Ø 10 mm length of tube 95 mm outer tube sieve inner tube window silver
16-511-11
Lure Tracheal Tube Ø 11 mm length of tube 95 mm outer tube sieve inner tube window silver
16-511-12
Lure Tracheal Tube Ø 12 mm length of tube 95 mm outer tube sieve inner tube window silver
16-511-13
Lure Tracheal Tube Ø 13 mm length of tube 95 mm outer tube sieve inner tube window silver

SafeMed Industry
Muslim Masjid Street,
Opp Muslim Masjid, Roras Road,
Muzaffar Pur, Sialkot 51310 Pakistan.

Phone: +92 523572570
Mobile: +92 314 726 202
WhatsApp: +92 314 726 202

Website: Safe-Med.Co
E-Mail: Sales@Safe-Med.Co

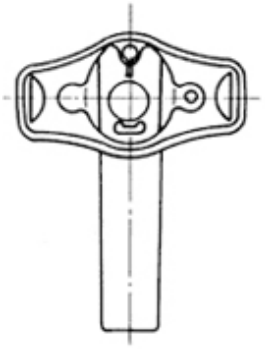

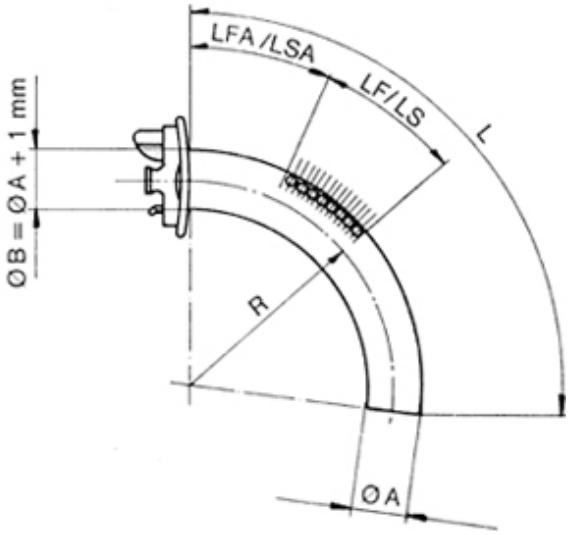

16-512-07
Lure Tracheal Tube Ø 7 mm length of tube 60 mm outer tube sieve inner tube sieve silver
16-512-08
Lure Tracheal Tube Ø 8 mm length of tube 65 mm outer tube sieve inner tube sieve silver
16-512-09
Lure Tracheal Tube Ø 9 mm length of tube 70 mm outer tube sieve inner tube sieve silver
16-512-10
Lure Tracheal Tube Ø 10 mm length of tube 75 mm outer tube sieve inner tube sieve silver
16-512-11
Lure Tracheal Tube Ø 11 mm length of tube 80 mm outer tube sieve inner tube sieve silver
16-512-12
Lure Tracheal Tube Ø12 mm length of tube 85 mm outer tube sieve inner tube sieve silver
16-512-13
Lure Tracheal Tube Ø 13 mm length of tube 90 mm outer tube sieve inner tube sieve silver

SafeMed Industry
Muslim Masjid Street,
Opp Muslim Masjid, Roras Road,
Muzaffar Pur, Sialkot 51310 Pakistan.

Phone: +92 523572570
Mobile: +92 314 726 202
WhatsApp: +92 314 726 202

Website: Safe-Med.Co
E-Mail: Sales@Safe-Med.Co

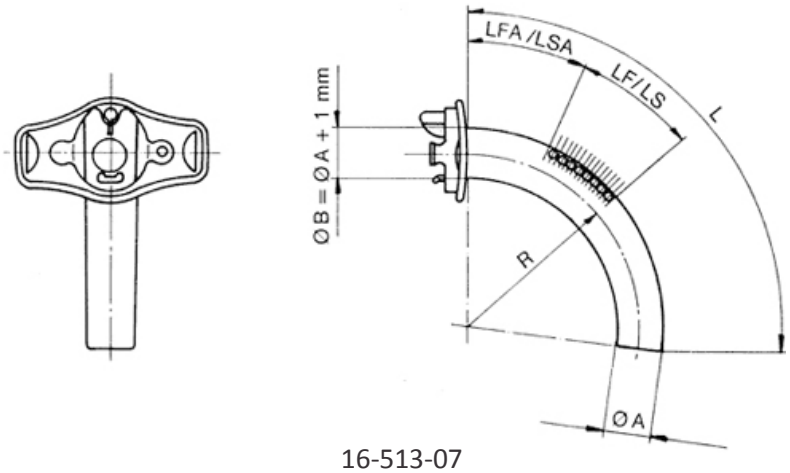

16-513-07
Lure Tracheal Tube 7 mm length of tube 60 mm outer tube sieve inner tube sieve German silver
16-513-08
Lure Tracheal Tube 8 mm length of tube 65 mm outer tube sieve inner tube sieve German silver
16-513-09
Lure Tracheal Tube 9 mm length of tube 70 mm outer tube sieve inner tube sieve German silver
16-513-10
Lure Tracheal Tube 10 mm length of tube 75 mm outer tube sieve inner tube sieve German silver
16-513-11
Lure Tracheal Tube 11 mm length of tube 80 mm outer tube sieve inner tube sieve German silver
16-513-12
Lure Tracheal Tube 12 mm length of tube 85 mm outer tube sieve inner tube sieve German silver
16-513-13
Lure Tracheal Tube 13 mm length of tube 90 mm outer tube sieve inner tube sieve German silver

SafeMed Industry
Muslim Masjid Street,
Opp Muslim Masjid, Roras Road,
Muzaffar Pur, Sialkot 51310 Pakistan.

Phone: +92 523572570
Mobile: +92 314 726 202
WhatsApp: +92 314 726 202

Website: Safe-Med.Co
E-Mail: Sales@Safe-Med.Co

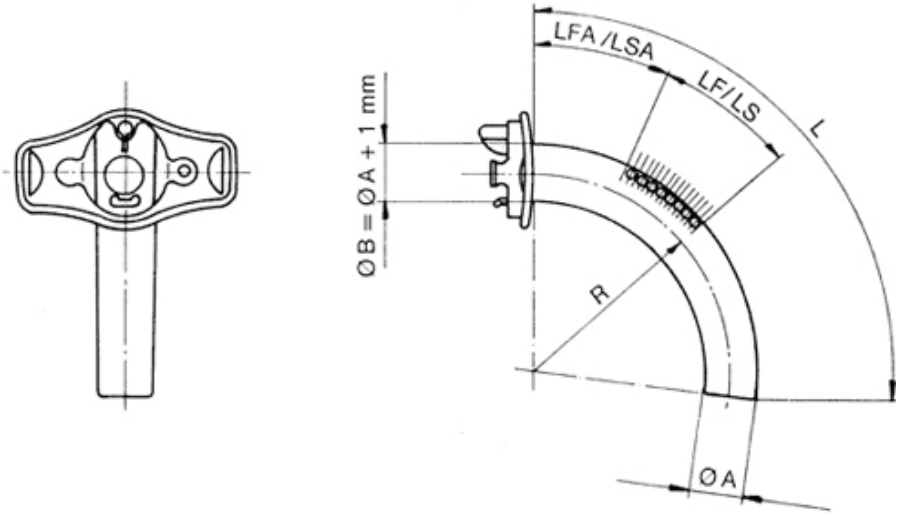

16-514-07
Lure Tracheal Tube Ø 7 mm length of tube 60 mm outer tube sieve inner tube sieve
16-514-08
Lure Tracheal Tube Ø 8 mm length of tube 65 mm outer tube sieve inner tube sieve
16-514-09
Lure Tracheal Tube Ø 9 mm length of tube 70 mm outer tube sieve inner tube sieve
16-514-10
Lure Tracheal Tube Ø 10 mm length of tube 75 mm outer tube sieve inner tube sieve
16-514-11
Lure Tracheal Tube Ø 11 mm length of tube 80 mm outer tube sieve inner tube sieve
16-514-12
Lure Tracheal Tube Ø 12 mm length of tube 85 mm outer tube sieve inner tube sieve
16-514-13
Lure Tracheal Tube Ø 13 mm length of tube 90 mm outer tube sieve inner tube sieve

SafeMed Industry
Muslim Masjid Street,
Opp Muslim Masjid, Roras Road,
Muzaffar Pur, Sialkot 51310 Pakistan.

Phone: +92 523572570
Mobile: +92 314 726 202
WhatsApp: +92 314 726 202

Website: Safe-Med.Co
E-Mail: Sales@Safe-Med.Co

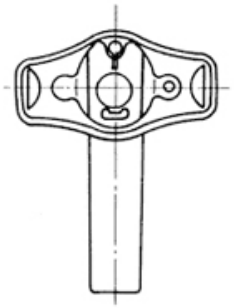

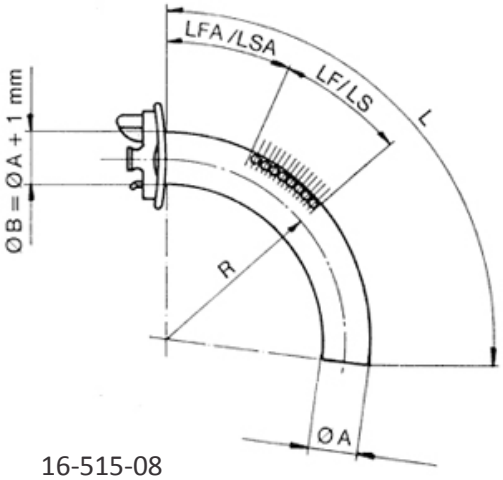

16-515-08
Lure Tracheal Tube Ø 8 mm length of tube 95 mm outer tube sieve inner tube sieve silver
16-515-09
Lure Tracheal Tube Ø 9 mm length of tube 95 mm outer tube sieve inner tube sieve silver
16-515-10
Lure Tracheal Tube Ø 10 mm length of tube 95 mm outer tube sieve inner tube sieve silver
16-515-11
Lure Tracheal Tube Ø 11 mm length of tube 95 mm outer tube sieve inner tube sieve silver
16-515-12
Lure Tracheal Tube Ø 12 mm length of tube 95 mm outer tube sieve inner tube sieve silver
16-515-13
Lure Tracheal Tube Ø 13 mm length of tube 95 mm outer tube sieve inner tube sieve silver

SafeMed Industry
Muslim Masjid Street,
Opp Muslim Masjid, Roras Road,
Muzaffar Pur, Sialkot 51310 Pakistan.

Phone: +92 523572570
Mobile: +92 314 726 202
WhatsApp: +92 314 726 202

Website: Safe-Med.Co
E-Mail: Sales@Safe-Med.Co

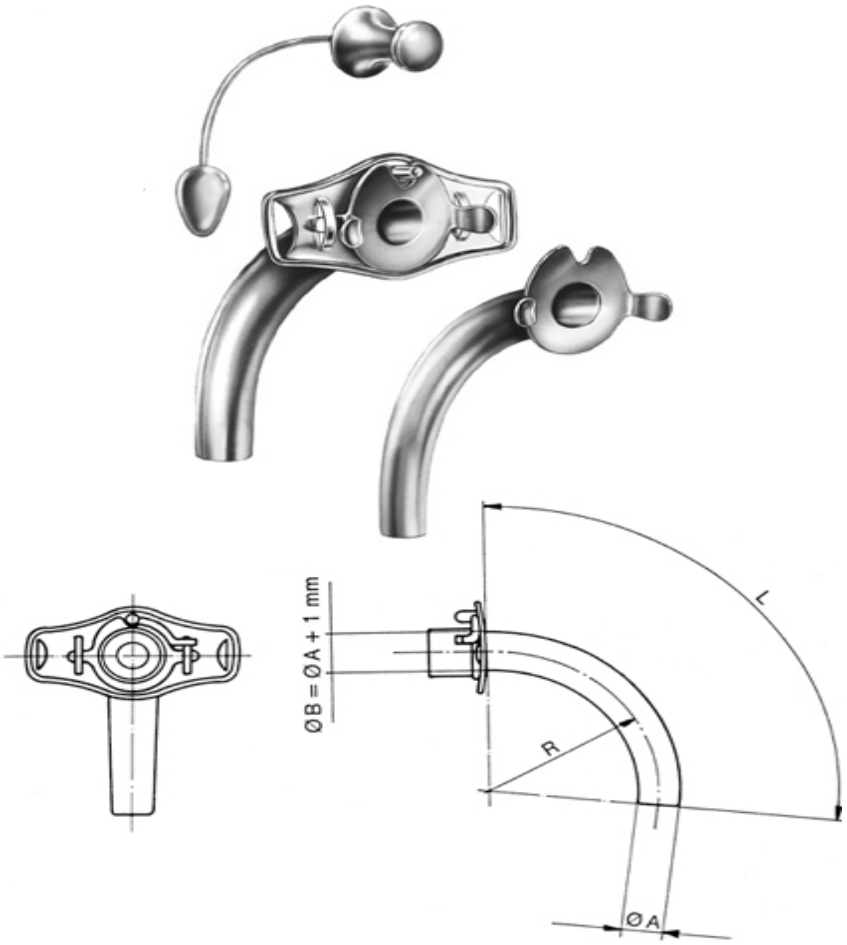

HIM-16-516-04
Chevalier-Jackson Tracheal Tube Ø 4 mm length of tube 45 mm outer tube closed inner tube closed silver
HIM-16-516-05
Chevalier-Jackson Tracheal Tube Ø 5 mm length of tube 50 mm outer tube closed inner tube closed silver
HIM-16-516-06
Chevalier-Jackson Tracheal Tube Ø 6 mm length of tube 55 mm outer tube closed inner tube closed silver
16-516-07
Chevalier-Jackson Tracheal Tube Ø 7 mm length of tube 60 mm outer tube closed inner tube closed silver
16-516-08
Chevalier-Jackson Tracheal Tube Ø 8 mm length of tube 65 mm outer tube closed inner tube closed silver
16-516-09
Chevalier-Jackson Tracheal Tube Ø 9 mm length of tube 70 mm outer tube closed inner tube closed silver
16-516-10
Chevalier-Jackson Tracheal Tube Ø 10 mm length of tube 75 mm outer tube closed inner tube closed silver
16-516-11
Chevalier-Jackson Tracheal Tube Ø 11 mm length of tube 80 mm outer tube closed inner tube closed silver
16-516-12
Chevalier-Jackson Tracheal Tube Ø 12 mm length of tube 85 mm outer tube closed inner tube closed silver
16-516-13
Chevalier-Jackson Tracheal Tube Ø 13 mm length of tube 90 mm outer tube closed inner tube closed silver

SafeMed Industry
Muslim Masjid Street,
Opp Muslim Masjid, Roras Road,
Muzaffar Pur, Sialkot 51310 Pakistan.

Phone: +92 523572570
Mobile: +92 314 726 202
WhatsApp: +92 314 726 202

Website: Safe-Med.Co
E-Mail: Sales@Safe-Med.Co

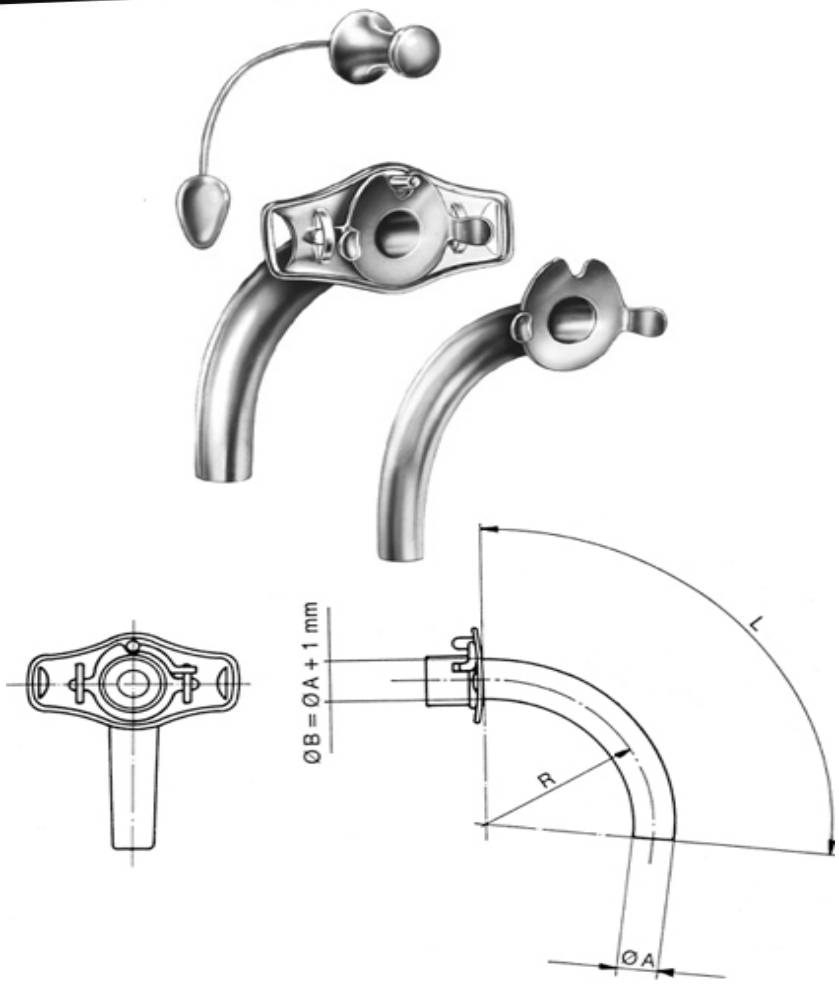

16-517-04
Chevalier-Jackson Tracheal Tube Ø 4 mm length of tube 45 mm outer tube closed inner tube closed German silver
16-517-05
Chevalier-Jackson Tracheal Tube Ø 5 mm length of tube 50 mm outer tube closed inner tube closed German silver
16-517-06
Chevalier-Jackson Tracheal Tube Ø 6 mm length of tube 55 mm outer tube closed inner tube closed German silver
16-517-07
Chevalier-Jackson Tracheal Tube Ø 7 mm length of tube 60 mm outer tube closed inner tube closed German silver
16-517-08
Chevalier-Jackson Tracheal Tube Ø 8 mm length of tube 65 mm outer tube closed inner tube closed German silver
16-517-09
Chevalier-Jackson Tracheal Tube Ø 9 mm length of tube 70 mm outer tube closed inner tube closed German silver
16-517-10
Chevalier-Jackson Tracheal Tube Ø 10 mm length of tube 75 mm outer tube closed inner tube closed German silver
16-517-11
Chevalier-Jackson Tracheal Tube Ø 11 mm length of tube 80 mm outer tube closed inner tube closed German silver
16-517-12
Chevalier-Jackson Tracheal Tube Ø 12 mm length of tube 85 mm outer tube closed inner tube closed German silver
16-517-13
Chevalier-Jackson Tracheal Tube Ø 13 mm length of tube 90 mm outer tube closed inner tube closed German silver

SafeMed Industry
Muslim Masjid Street,
Opp Muslim Masjid, Roras Road,
Muzaffar Pur, Sialkot 51310 Pakistan.

Phone: +92 523572570
Mobile: +92 314 726 202
WhatsApp: +92 314 726 202

Website: Safe-Med.Co
E-Mail: Sales@Safe-Med.Co

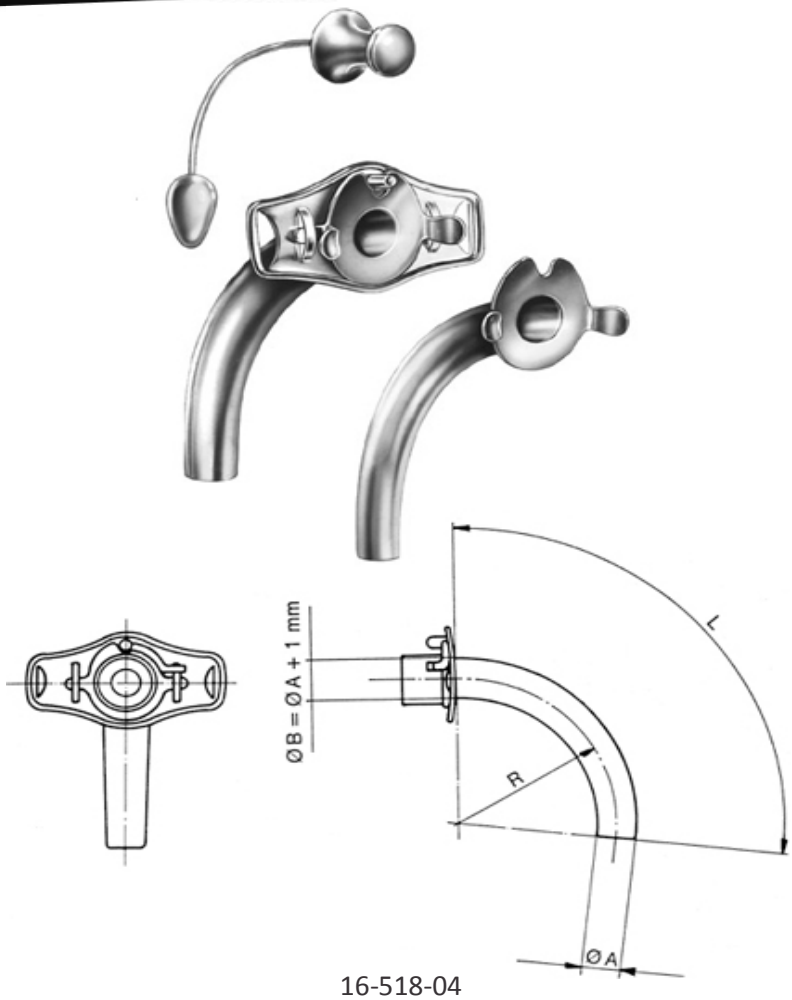

16-518-04
Chevalier-Jackson Tracheal Tube Ø 4 mm length of tube 45 mm outer tube closed inner tube closed
16-518-05
Chevalier-Jackson Tracheal Tube Ø 5 mm length of tube 50 mm outer tube closed inner tube closed
16-518-06
Chevalier-Jackson Tracheal Tube Ø 6 mm length of tube 55 mm outer tube closed inner tube closed
16-518-07
Chevalier-Jackson Tracheal Tube Ø 7 mm length of tube 60 mm outer tube closed inner tube closed
16-518-08
Chevalier-Jackson Tracheal Tube Ø 8 mm length of tube 65 mm outer tube closed inner tube closed
16-518-09
Chevalier-Jackson Tracheal Tube Ø 9 mm length of tube 70 mm outer tube closed inner tube closed
16-518-10
Chevalier-Jackson Tracheal Tube Ø 10 mm length of tube 75 mm outer tube closed inner tube closed
16-518-11
Chevalier-Jackson Tracheal Tube Ø 11 mm length of tube 80 mm outer tube closed inner tube closed
16-518-12
Chevalier-Jackson Tracheal Tube Ø 12 mm length of tube 85 mm outer tube closed inner tube closed
16-518-13
Chevalier-Jackson Tracheal Tube Ø 13 mm length of tube 90 mm outer tube closed inner tube closed

SafeMed Industry
Muslim Masjid Street,
Opp Muslim Masjid, Roras Road,
Muzaffar Pur, Sialkot 51310 Pakistan.

Phone: +92 523572570
Mobile: +92 314 726 202
WhatsApp: +92 314 726 202

Website: Safe-Med.Co
E-Mail: Sales@Safe-Med.Co

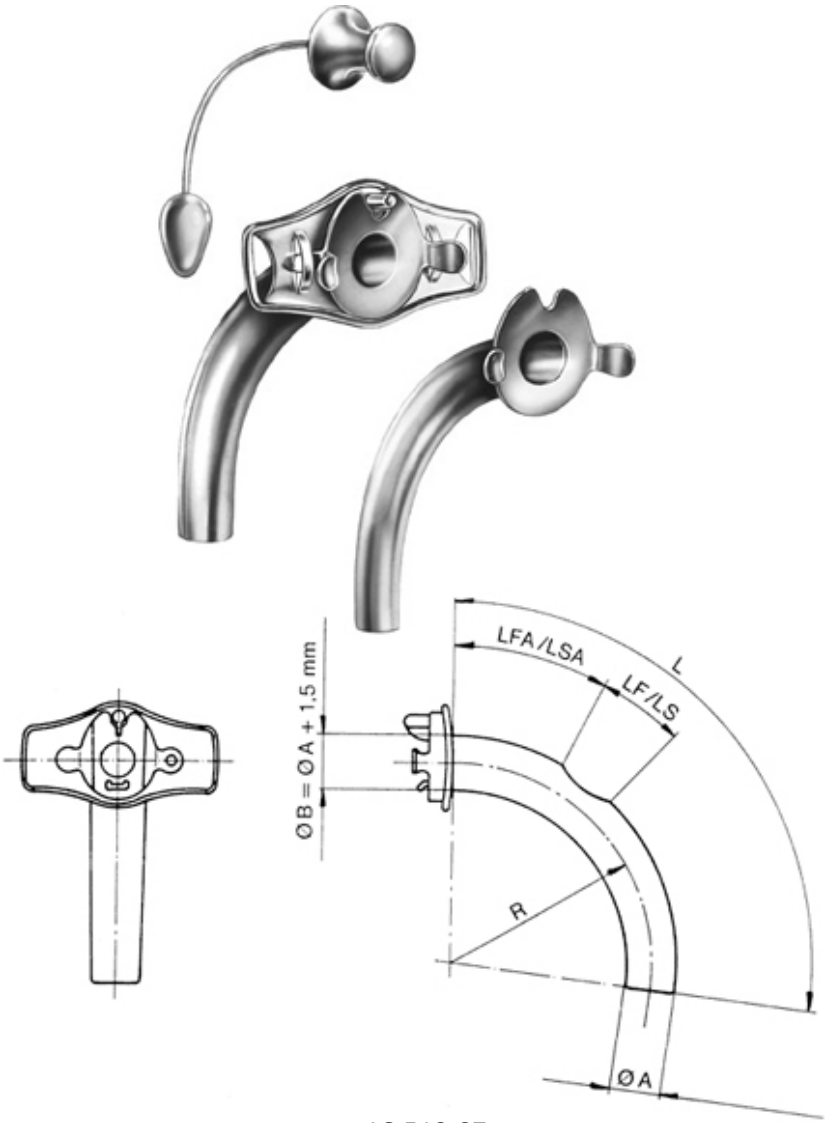

16-519-07
Chevalier-Jackson Tracheal Tube Ø 7 mm length of tube 60 mm outer tube window inner tube window silver
16-519-08
Chevalier-Jackson Tracheal Tube Ø 8 mm length of tube 65 mm outer tube window inner tube window silver
16-519-09
Chevalier-Jackson Tracheal Tube Ø 9 mm length of tube 70 mm outer tube window inner tube window silver
16-519-10
Chevalier-Jackson Tracheal Tube Ø 10 mm length of tube 75 mm outer tube window inner tube window silver
16-519-11
Chevalier-Jackson Tracheal Tube Ø 11 mm length of tube 80 mm outer tube window inner tube window silver
16-519-12
Chevalier-Jackson Tracheal Tube Ø 12 mm length of tube 85 mm outer tube window inner tube window silver
16-519-13
Chevalier-Jackson Tracheal Tube Ø 13 mm length of tube 90 mm outer tube window inner tube window silver

SafeMed Industry
Muslim Masjid Street,
Opp Muslim Masjid, Roras Road,
Muzaffar Pur, Sialkot 51310 Pakistan.

Phone: +92 523572570
Mobile: +92 314 726 202
WhatsApp: +92 314 726 202

Website: Safe-Med.Co
E-Mail: Sales@Safe-Med.Co

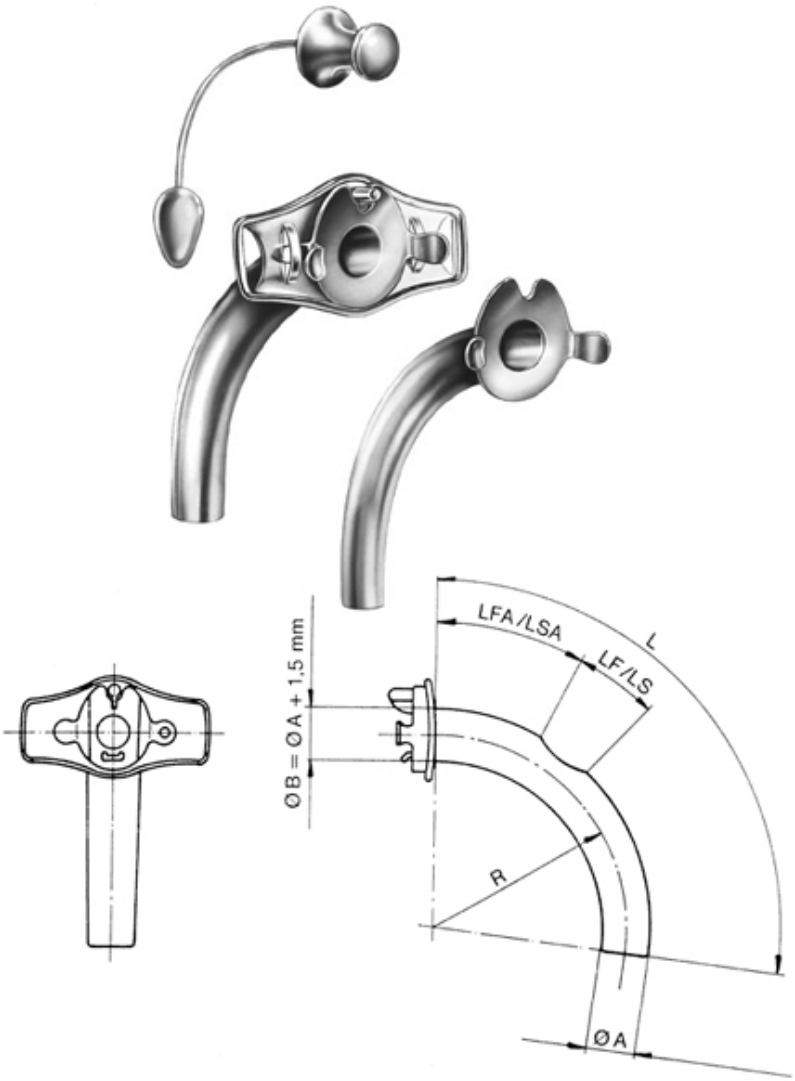

16-520-07
Chevalier-Jackson Tracheal Tube Ø 7 mm length of tube 60 mm outer tube window inner tube window German silver
16-520-08
Chevalier-Jackson Tracheal Tube Ø 8 mm length of tube 65 mm outer tube window inner tube window German silver
16-520-09
Chevalier-Jackson Tracheal Tube Ø 9 mm length of tube 70 mm outer tube window inner tube window German silver
16-520-10
Chevalier-Jackson Tracheal Tube Ø 10 mm length of tube 75 mm outer tube window inner tube window German silver
16-520-11
Chevalier-Jackson Tracheal Tube Ø 11 mm length of tube 80 mm outer tube window inner tube window German silver
16-520-12
Chevalier-Jackson Tracheal Tube Ø 12 mm length of tube 85 mm outer tube window inner tube window German silver
16-520-13
Chevalier-Jackson Tracheal Tube Ø 13 mm length of tube 90 mm outer tube window inner tube window German silver

SafeMed Industry
Muslim Masjid Street,
Opp Muslim Masjid, Roras Road,
Muzaffar Pur, Sialkot 51310 Pakistan.

Phone: +92 523572570
Mobile: +92 314 726 202
WhatsApp: +92 314 726 202

Website: Safe-Med.Co
E-Mail: Sales@Safe-Med.Co

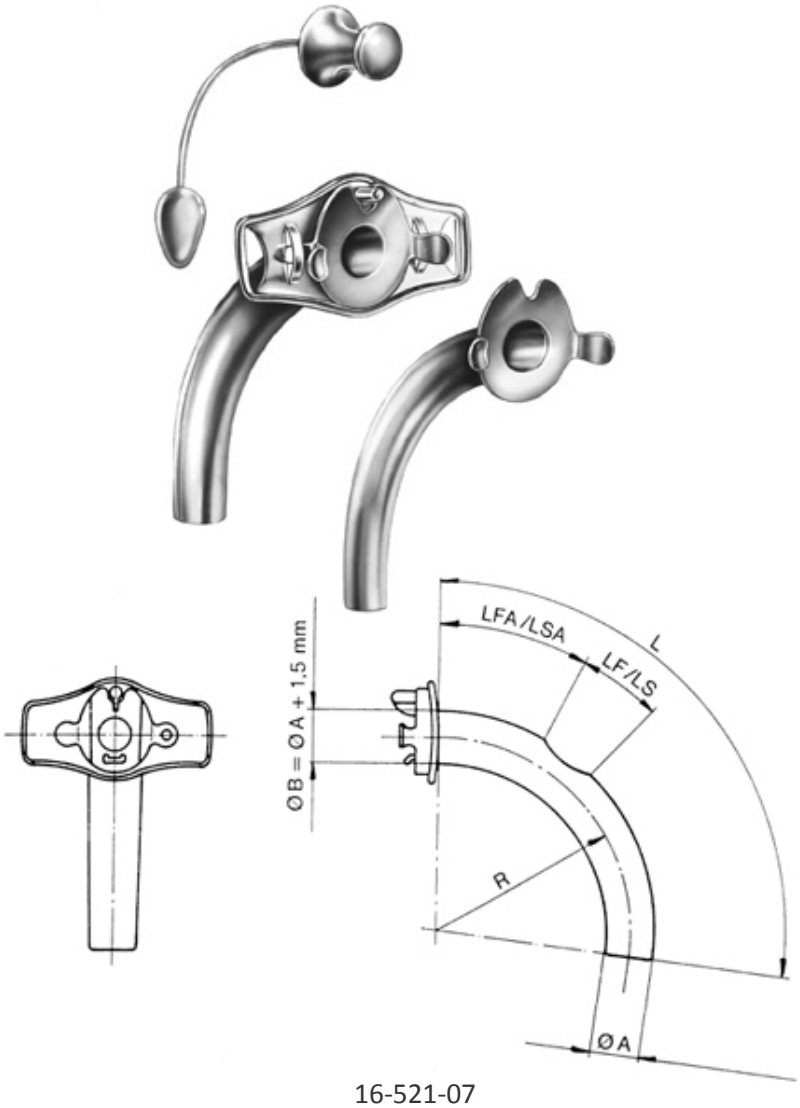

16-521-07
Chevalier-Jackson Tracheal Tube Ø 7 mm length of tube 60 mm outer tube window inner tube window
16-521-08
Chevalier-Jackson Tracheal Tube Ø 8 mm length of tube 65 mm outer tube window inner tube window
16-521-09
Chevalier-Jackson Tracheal Tube Ø 9 mm length of tube 70 mm outer tube window inner tube window
16-521-10
Chevalier-Jackson Tracheal Tube Ø 10 mm length of tube 75 mm outer tube window inner tube window
16-521-11
Chevalier-Jackson Tracheal Tube Ø 11 mm length of tube 80 mm outer tube window inner tube window
16-521-12
Chevalier-Jackson Tracheal Tube Ø 12 mm length of tube 85 mm outer tube window inner tube window
16-521-13
Chevalier-Jackson Tracheal Tube Ø 13 mm length of tube 90 mm outer tube window inner tube window

SafeMed Industry
Muslim Masjid Street,
Opp Muslim Masjid, Roras Road,
Muzaffar Pur, Sialkot 51310 Pakistan.

Phone: +92 523572570
Mobile: +92 314 726 202
WhatsApp: +92 314 726 202

Website: Safe-Med.Co
E-Mail: Sales@Safe-Med.Co

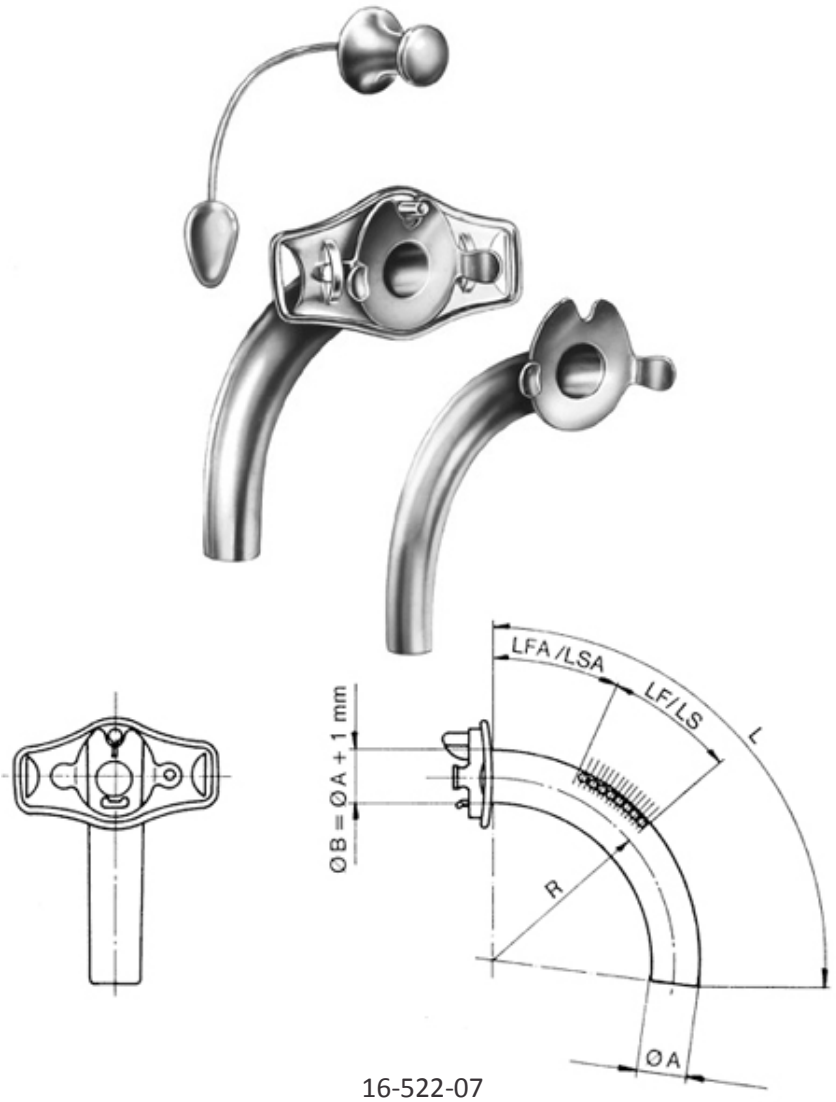

16-522-07
Chevalier-Jackson Tracheal Tube Ø 7 mm length of tube 60 mm outer tube sieve inner tube window silver
16-522-08
Chevalier-Jackson Tracheal Tube Ø 8 mm length of tube 65 mm outer tube sieve inner tube window silver
16-522-09
Chevalier-Jackson Tracheal Tube Ø 9 mm length of tube 70 mm outer tube sieve inner tube window silver
16-522-10
Chevalier-Jackson Tracheal Tube Ø 10 mm length of tube 75 mm outer tube sieve inner tube window silver
16-522-11
Chevalier-Jackson Tracheal Tube Ø 11 mm length of tube 80 mm outer tube sieve inner tube window silver
16-522-12
Chevalier-Jackson Tracheal Tube Ø 12 mm length of tube 85 mm outer tube sieve inner tube window silver
16-522-13
Chevalier-Jackson Tracheal Tube Ø 13 mm length of tube 90 mm outer tube sieve inner tube window silver

SafeMed Industry
Muslim Masjid Street,
Opp Muslim Masjid, Roras Road,
Muzaffar Pur, Sialkot 51310 Pakistan.

Phone: +92 523572570
Mobile: +92 314 726 202
WhatsApp: +92 314 726 202

Website: Safe-Med.Co
E-Mail: Sales@Safe-Med.Co

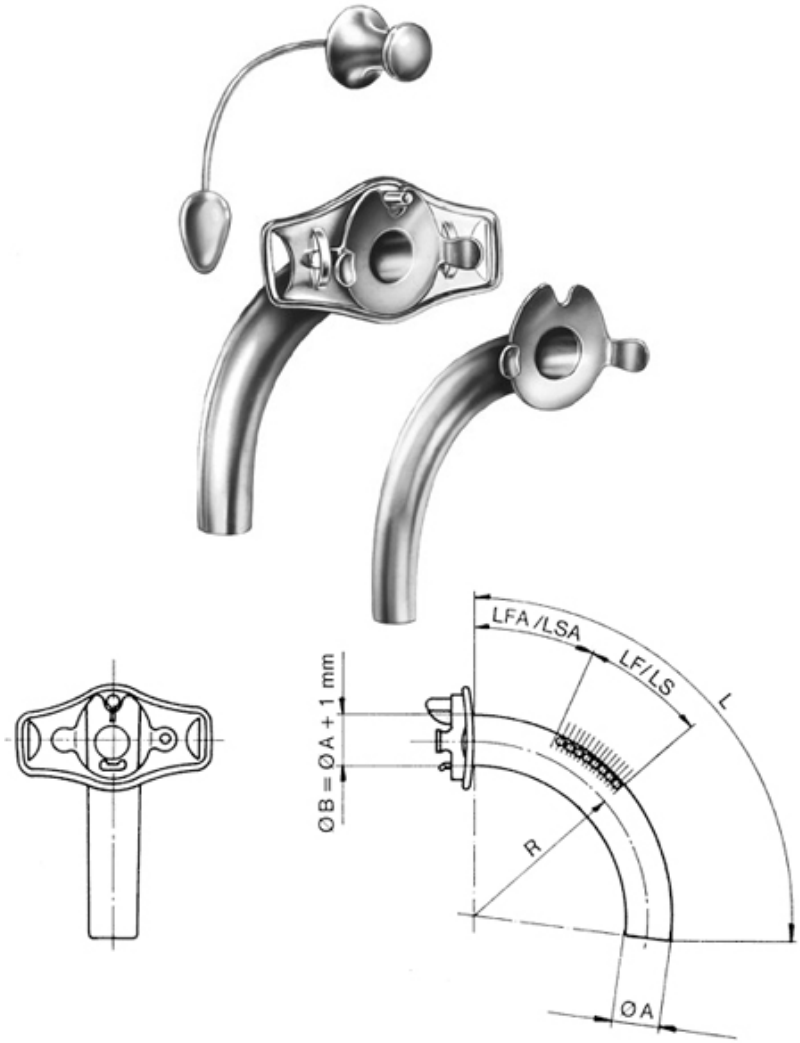

16-523-07
Chevalier-Jackson Tracheal Tube Ø 7 mm length of tube 60 mm outer tube sieve inner tube window German silver
16-523-08
Chevalier-Jackson Tracheal Tube Ø 8 mm length of tube 65 mm outer tube sieve inner tube window German silver
16-523-09
Chevalier-Jackson Tracheal Tube Ø 9 mm length of tube 70 mm outer tube sieve inner tube window German silver
16-523-10
Chevalier-Jackson Tracheal Tube Ø 10 mm length of tube 75 mm outer tube sieve inner tube window German silver
16-523-11
Chevalier-Jackson Tracheal Tube Ø 11 mm length of tube 80 mm outer tube sieve inner tube window German silver
16-523-12
Chevalier-Jackson Tracheal Tube Ø 12 mm length of tube 85 mm outer tube sieve inner tube window German silver
16-523-13
Chevalier-Jackson Tracheal Tube Ø 13 mm length of tube 90 mm outer tube sieve inner tube window German silver

SafeMed Industry
Muslim Masjid Street,
Opp Muslim Masjid, Roras Road,
Muzaffar Pur, Sialkot 51310 Pakistan.

Phone: +92 523572570
Mobile: +92 314 726 202
WhatsApp: +92 314 726 202

Website: Safe-Med.Co
E-Mail: Sales@Safe-Med.Co

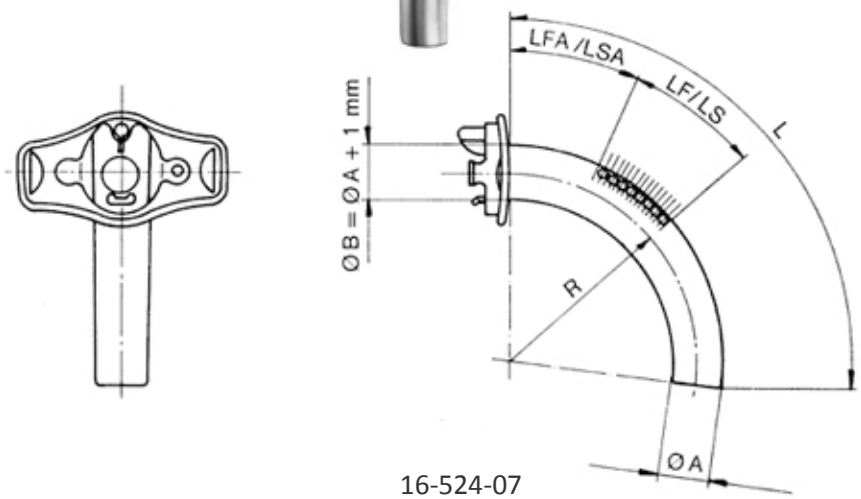

16-524-07
Chevalier-Jackson Tracheal Tube Ø 7 mm length of tube 60 mm outer tube sieve inner tube window
16-524-08
Chevalier-Jackson Tracheal Tube Ø 8 mm length of tube 65 mm outer tube sieve inner tube window
16-524-09
Chevalier-Jackson Tracheal Tube Ø 9 mm length of tube 70 mm outer tube sieve inner tube window
16-524-10
Chevalier-Jackson Tracheal Tube Ø 10 mm length of tube 75 mm outer tube sieve inner tube window
16-524-11
Chevalier-Jackson Tracheal Tube Ø 11 mm length of tube 80 mm outer tube sieve inner tube window
16-524-12
Chevalier-Jackson Tracheal Tube Ø 12 mm length of tube 85 mm outer tube sieve inner tube window
16-524-13
Chevalier-Jackson Tracheal Tube Ø 13 mm length of tube 90 mm outer tube sieve inner tube window

SafeMed Industry
Muslim Masjid Street,
Opp Muslim Masjid, Roras Road,
Muzaffar Pur, Sialkot 51310 Pakistan.

Phone: +92 523572570
Mobile: +92 314 726 202
WhatsApp: +92 314 726 202

Website: Safe-Med.Co
E-Mail: Sales@Safe-Med.Co

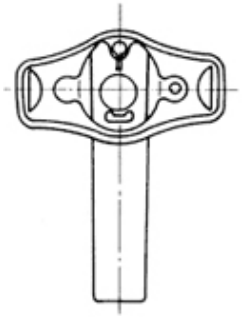

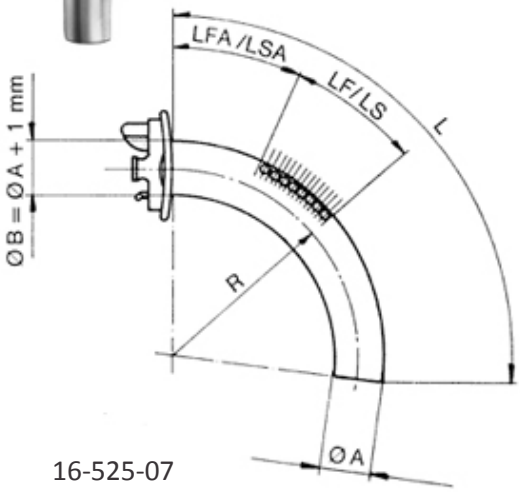

16-525-07
Chevalier-Jackson Tracheal Tube Ø 7 mm length of tube 60 mm outer tube sieve inner tube sieve silver
16-525-08
Chevalier-Jackson Tracheal Tube Ø 8 mm length of tube 65 mm outer tube sieve inner tube sieve silver 16-525-09
Chevalier-Jackson Tracheal Tube Ø 9 mm length of tube 70 mm outer tube sieve inner tube sieve silver
16-525-10
Chevalier-Jackson Tracheal Tube Ø 10 mm length of tube 75 mm outer tube sieve inner tube sieve silver 16-525-11
Chevalier-Jackson Tracheal Tube Ø 11 mm length of tube 80 mm outer tube sieve inner tube sieve silver 16-525-12
Chevalier-Jackson Tracheal Tube Ø 12 mm length of tube 85 mm outer tube sieve inner tube sieve silver 16-525-13
Chevalier-Jackson Tracheal Tube Ø 13 mm length of tube 90 mm outer tube sieve inner tube sieve silver

SafeMed Industry
Muslim Masjid Street,
Opp Muslim Masjid, Roras Road,
Muzaffar Pur, Sialkot 51310 Pakistan.

Phone: +92 523572570
Mobile: +92 314 726 202
WhatsApp: +92 314 726 202

Website: Safe-Med.Co
E-Mail: Sales@Safe-Med.Co

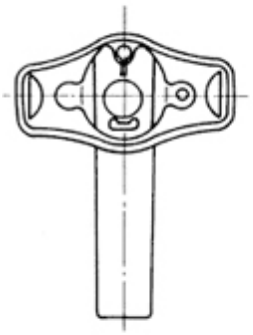

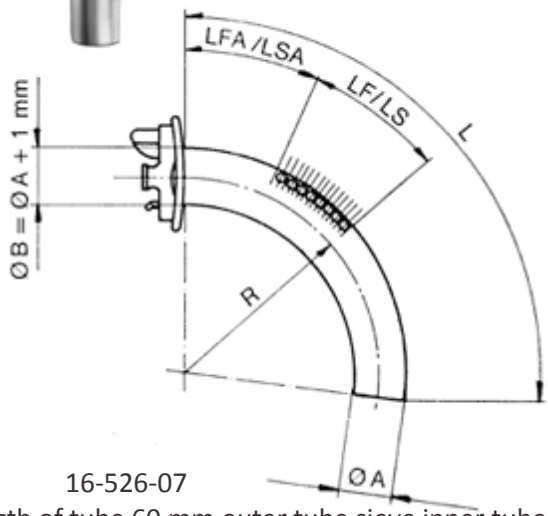

16-526-07
Chevalier-Jackson Tracheal Tube Ø 7 mm length of tube 60 mm outer tube sieve inner tube sieve German silver
16-526-08
Chevalier-Jackson Tracheal Tube Ø 8 mm length of tube 65 mm outer tube sieve inner tube sieve German silver
16-526-09
Chevalier-Jackson Tracheal Tube Ø 9 mm length of tube 70 mm outer tube sieve inner tube sieve German silver
16-526-10
Chevalier-Jackson Tracheal Tube Ø 10 mm length of tube 75 mm outer tube sieve inner tube sieve German silver
16-526-11
Chevalier-Jackson Tracheal Tube Ø 11 mm length of tube 80 mm outer tube sieve inner tube sieve German silver
16-526-12
Chevalier-Jackson Tracheal Tube Ø 12 mm length of tube 85 mm outer tube sieve inner tube sieve German silver
16-526-13
Chevalier-Jackson Tracheal Tube Ø 13 mm length of tube 90 mm outer tube sieve inner tube sieve German silver

SafeMed Industry
Muslim Masjid Street,
Opp Muslim Masjid, Roras Road,
Muzaffar Pur, Sialkot 51310 Pakistan.

Phone: +92 523572570
Mobile: +92 314 726 202
WhatsApp: +92 314 726 202

Website: Safe-Med.Co
E-Mail: Sales@Safe-Med.Co

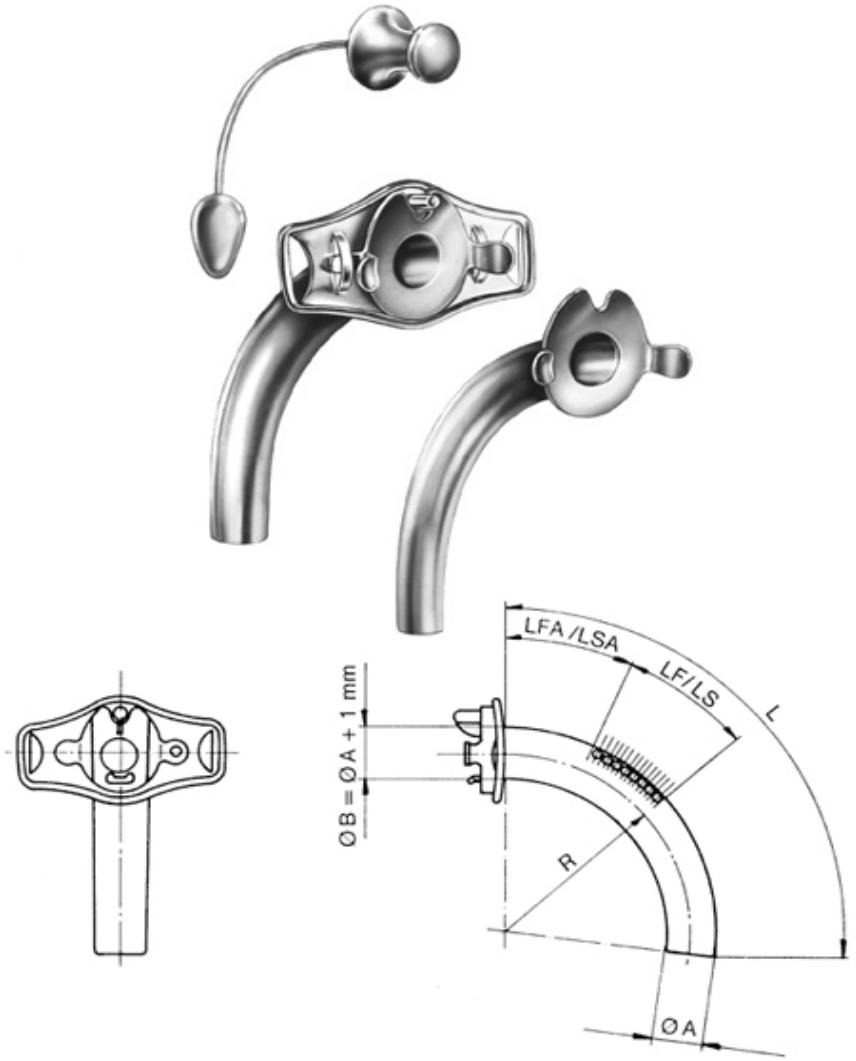

16-527-07
Chevalier-Jackson Tracheal Tube Ø 7 mm length of tube 60 mm outer tube sieve inner tube sieve
16-527-08
Chevalier-Jackson Tracheal Tube Ø 8 mm length of tube 65 mm outer tube sieve inner tube sieve
16-527-09
Chevalier-Jackson Tracheal Tube Ø9 mm length of tube 70 mm outer tube sieve inner tube sieve
16-527-10
Chevalier-Jackson Tracheal Tube Ø 10 mm length of tube 75 mm outer tube sieve inner tube sieve
16-527-11
Chevalier-Jackson Tracheal Tube Ø 11 mm length of tube 80 mm outer tube sieve inner tube sieve
16-527-12
Chevalier-Jackson Tracheal Tube Ø 12 mm length of tube 85 mm outer tube sieve inner tube sieve
16-527-13
Chevalier-Jackson Tracheal Tube Ø 13 mm length of tube 90 mm outer tube sieve inner tube sieve

SafeMed Industry
Muslim Masjid Street,
Opp Muslim Masjid, Roras Road,
Muzaffar Pur, Sialkot 51310 Pakistan.

Phone: +92 523572570
Mobile: +92 314 726 202
WhatsApp: +92 314 726 202

Website: Safe-Med.Co
E-Mail: Sales@Safe-Med.Co

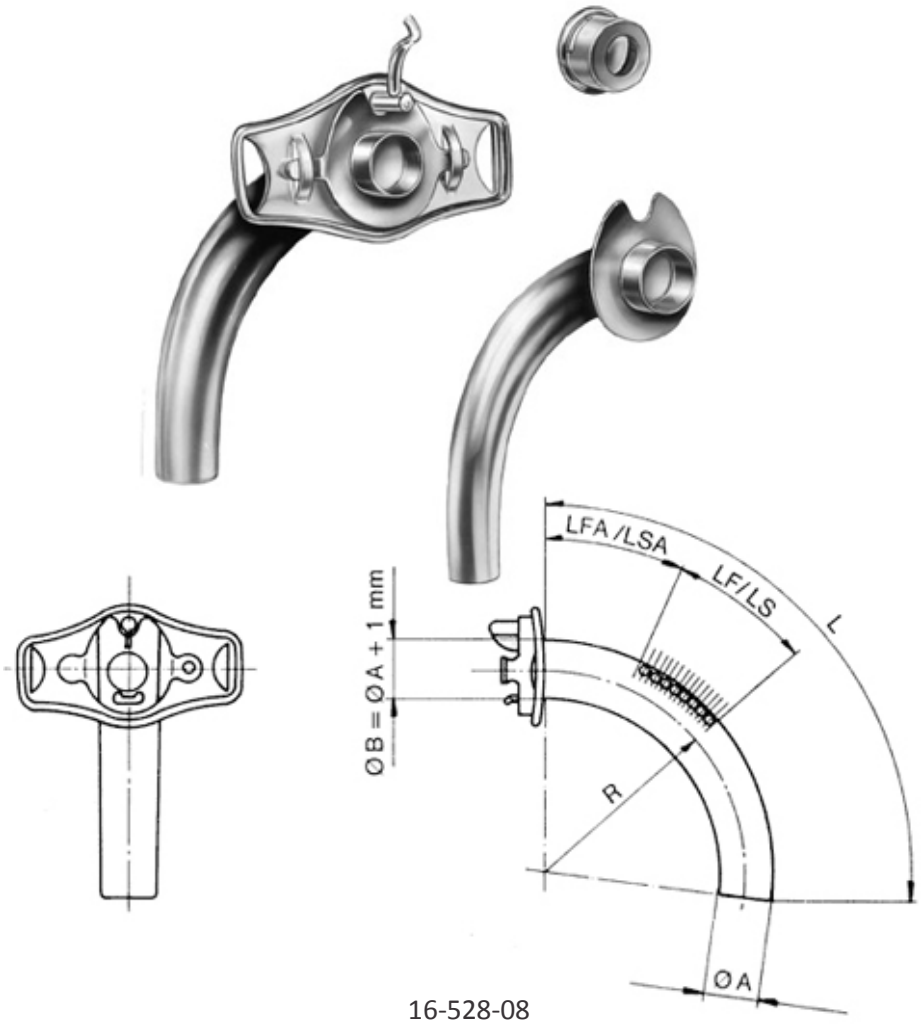

16-528-08
Speaking Tube Ø 8 mm length of tube 65 mm with box valve outer tube closed inner tube closed German silver
16-528-09
Speaking Tube Ø 9 mm length of tube 70 mm with box valve outer tube closed inner tube closed German silver
16-528-10
Speaking Tube Ø 10 mm length of tube 75 mm with box valve outer tube closed inner tube closed German silver
16-528-11
Speaking Tube Ø 11 mm length of tube 80 mm with box valve outer tube closed inner tube closed German silver
16-528-12
Speaking Tube Ø 12 mm length of tube 85 mm with box valve outer tube closed inner tube closed German silver
16-528-13
Speaking Tube Ø 13 mm length of tube 90 mm with box valve outer tube closed inner tube closed German silver

SafeMed Industry
Muslim Masjid Street,
Opp Muslim Masjid, Roras Road,
Muzaffar Pur, Sialkot 51310 Pakistan.

Phone: +92 523572570
Mobile: +92 314 726 202
WhatsApp: +92 314 726 202

Website: Safe-Med.Co
E-Mail: Sales@Safe-Med.Co

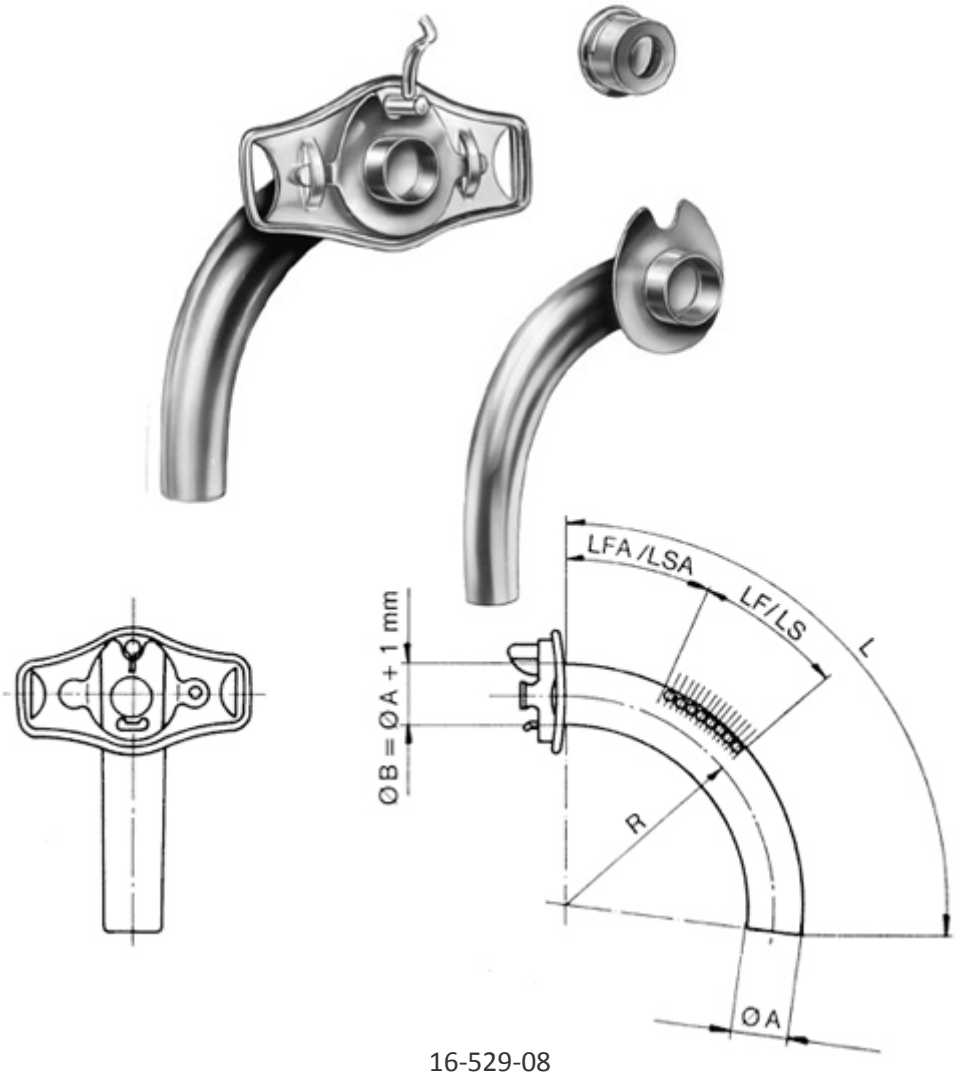

16-529-08
Speaking Tube Ø 8 mm length of tube 65 mm with box valve outer tube window inner tube window German silver
16-529-09
Speaking Tube Ø 9 mm length of tube 70 mm with box valve outer tube window inner tube window German silver
16-529-10
Speaking Tube Ø 10 mm length of tube 75 mm with box valve outer tube window inner tube window German silver
16-529-11
Speaking Tube Ø 11 mm length of tube 80 mm with box valve outer tube window inner tube window German silver
16-529-12
Speaking Tube Ø 12 mm length of tube 85 mm with box valve outer tube window inner tube window German silver
16-529-13
Speaking Tube Ø 13 mm length of tube 90 mm with box valve outer tube window inner tube window German silver

SafeMed Industry
Muslim Masjid Street,
Opp Muslim Masjid, Roras Road,
Muzaffar Pur, Sialkot 51310 Pakistan.

Phone: +92 523572570
Mobile: +92 314 726 202
WhatsApp: +92 314 726 202

Website: Safe-Med.Co
E-Mail: Sales@Safe-Med.Co

SAFEMED INSDUSTRY

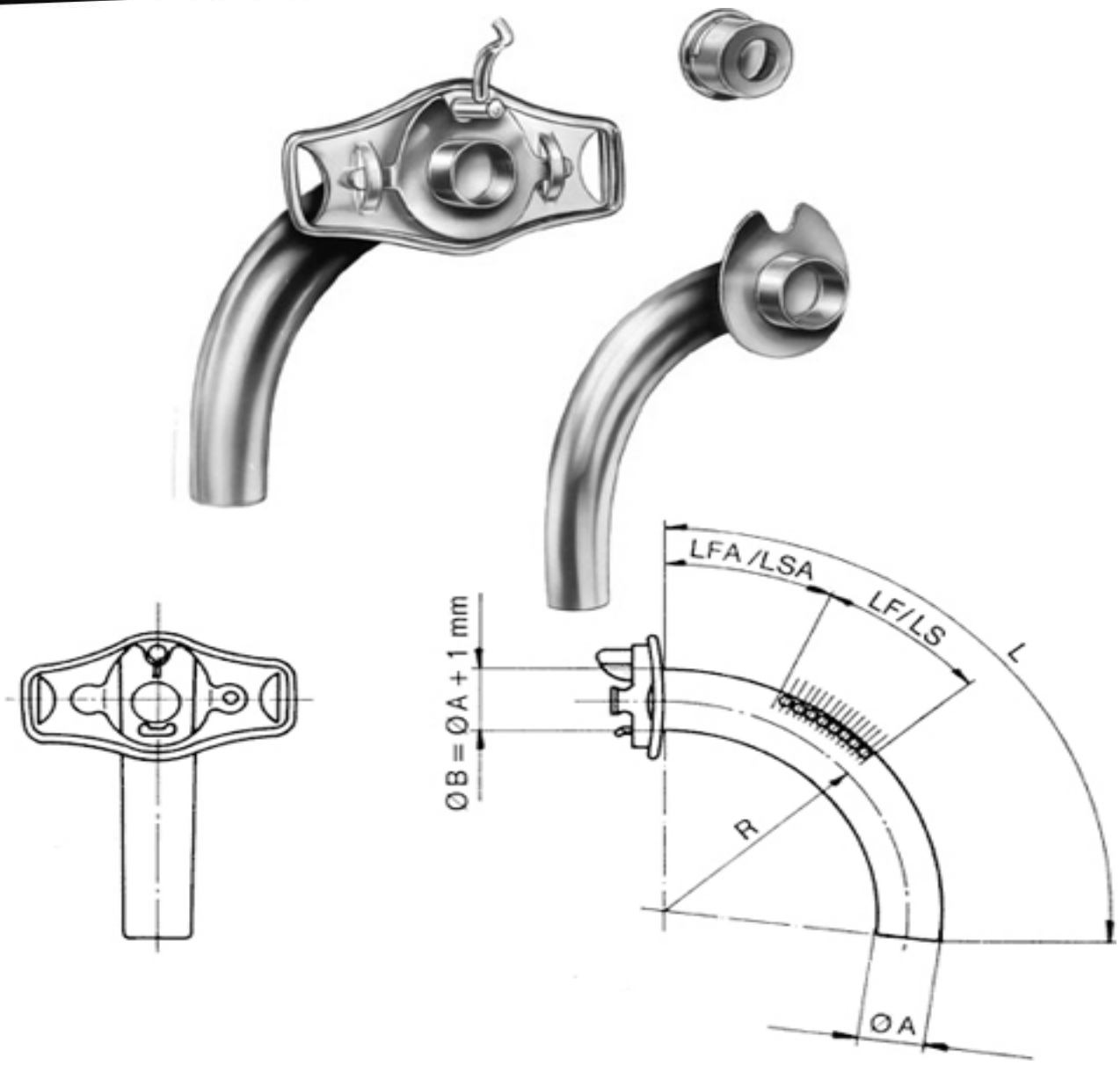

16-531-08
Speaking Tube Ø 8 mm length of tube 65 mm with box valve outer tube sieve inner tube sieve German silver
16-531-09
Speaking Tube Ø 9 mm length of tube 70 mm with box valve outer tube sieve inner tube sieve German silver
16-531-10
Speaking Tube Ø 10 mm length of tube 75 mm with box valve outer tube sieve inner tube sieve German silver
16-531-11
Speaking Tube Ø 11 mm length of tube 80 mm with box valve outer tube sieve inner tube sieve German silver
16-531-12
Speaking Tube Ø 12 mm length of tube 85 mm with box valve outer tube sieve inner tube sieve German silver
16-531-13
Speaking Tube Ø 13 mm length of tube 90 mm with box valve outer tube sieve inner tube sieve German silver

SafeMed Industry
Muslim Masjid Street,
Opp Muslim Masjid, Roras Road,
Muzaffar Pur, Sialkot 51310 Pakistan.

Phone: +92 523572570
Mobile: +92 314 726 202
WhatsApp: +92 314 726 202

Website: Safe-Med.Co
E-Mail: Sales@Safe-Med.Co

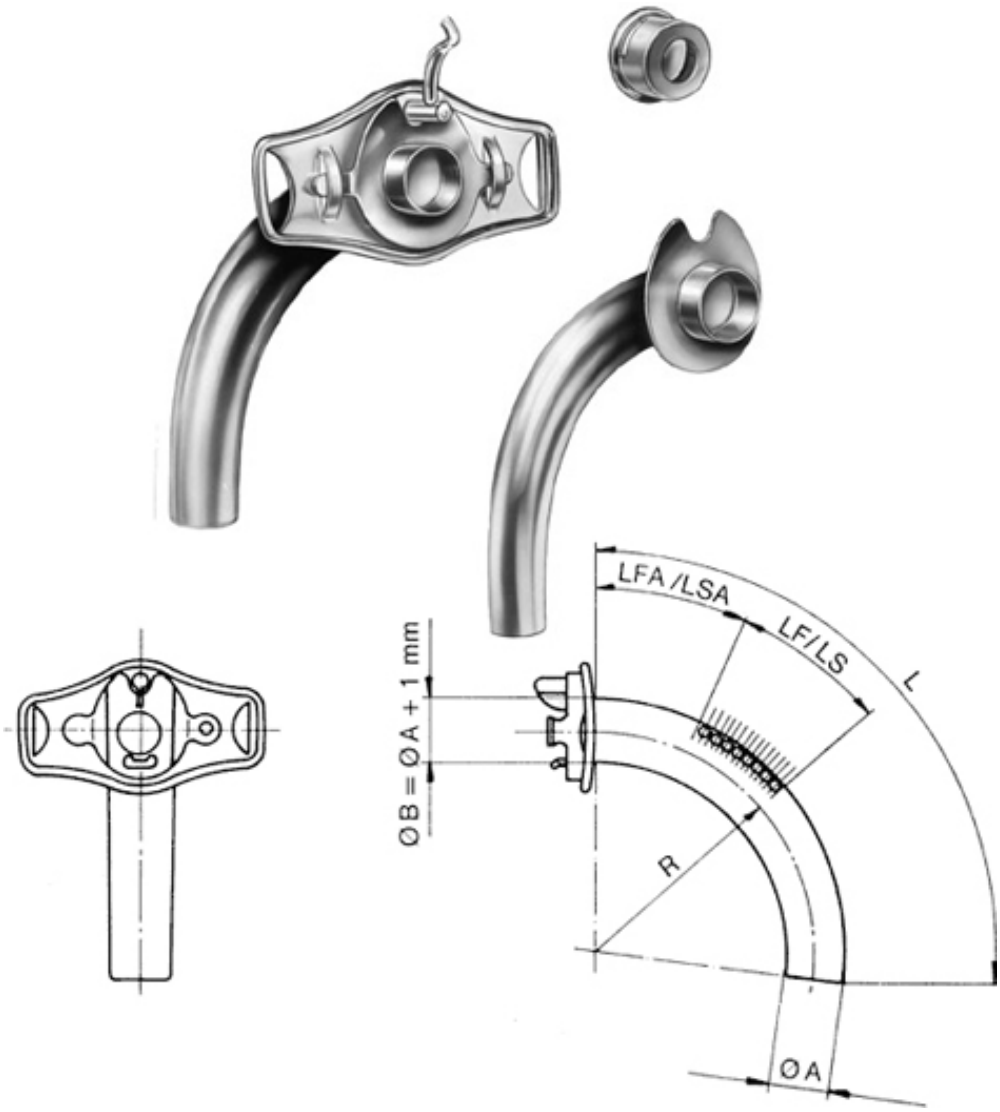

16-530-08
Speaking Tube Ø 8 mm length of tube 65 mm with box valve outer tube sieve inner tube window German silver
16-530-09
Speaking Tube Ø 9 mm length of tube 70 mm with box valve outer tube sieve inner tube window German silver
16-530-10
Speaking Tube Ø 10 mm length of tube 75 mm with box valve outer tube sieve inner tube window German silver
16-530-11
Speaking Tube Ø 11 mm length of tube 80 mm with box valve outer tube sieve inner tube window German silver
16-530-12
Speaking Tube Ø 12 mm length of tube 85 mm with box valve outer tube sieve inner tube window German silver
16-530-13
Speaking Tube Ø 13 mm length of tube 90 mm with box valve outer tube sieve inner tube window German silver

SafeMed Industry
Muslim Masjid Street,
Opp Muslim Masjid, Roras Road,
Muzaffar Pur, Sialkot 51310 Pakistan.

Phone: +92 523572570
Mobile: +92 314 726 202
WhatsApp: +92 314 726 202

Website: Safe-Med.Co
E-Mail: Sales@Safe-Med.Co

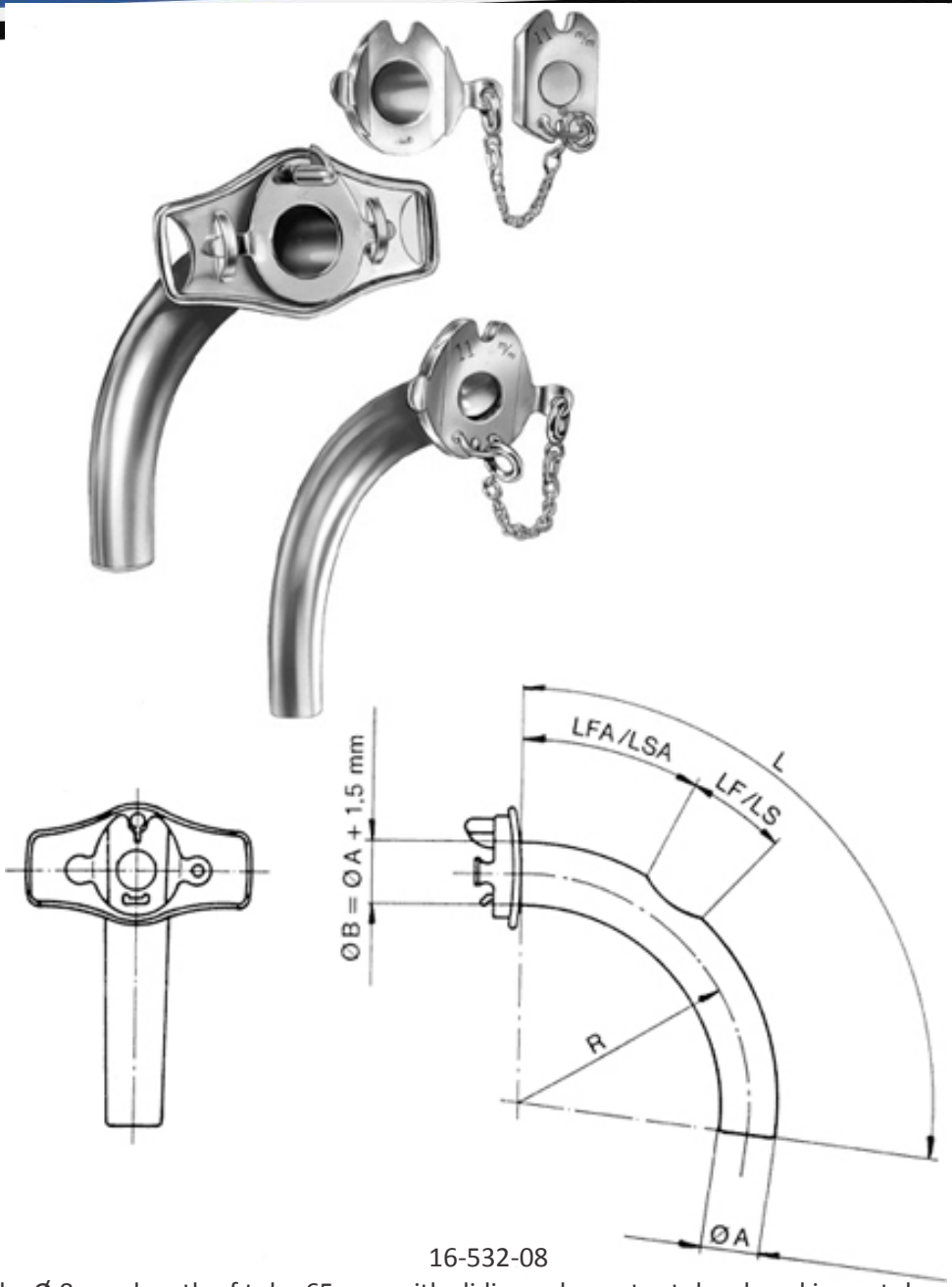

16-532-08
Speaking Tube Ø 8 mm length of tube 65 mm with sliding valve outer tube closed inner tube closed German silver 16-532-09
Speaking Tube Ø 9 mm length of tube 70 mm with sliding valve outer tube closed inner tube closed German silver 16-532-10
Speaking Tube Ø 10 mm length of tube 75 mm with sliding valve outer tube closed inner tube closed German silver 16-532-11
Speaking Tube Ø 11 mm length of tube 80 mm with sliding valve outer tube closed inner tube closed German silver 16-532-12
Speaking Tube Ø 12 mm length of tube 85 mm with sliding valve outer tube closed inner tube closed German silver 16-532-13
Speaking Tube Ø 13 mm length of tube 90 mm with sliding valve outer tube closed inner tube closed German silver

SafeMed Industry
Muslim Masjid Street,
Opp Muslim Masjid, Roras Road,
Muzaffar Pur, Sialkot 51310 Pakistan.

Phone: +92 523572570
Mobile: +92 314 726 202
WhatsApp: +92 314 726 202

Website: Safe-Med.Co
E-Mail: Sales@Safe-Med.Co

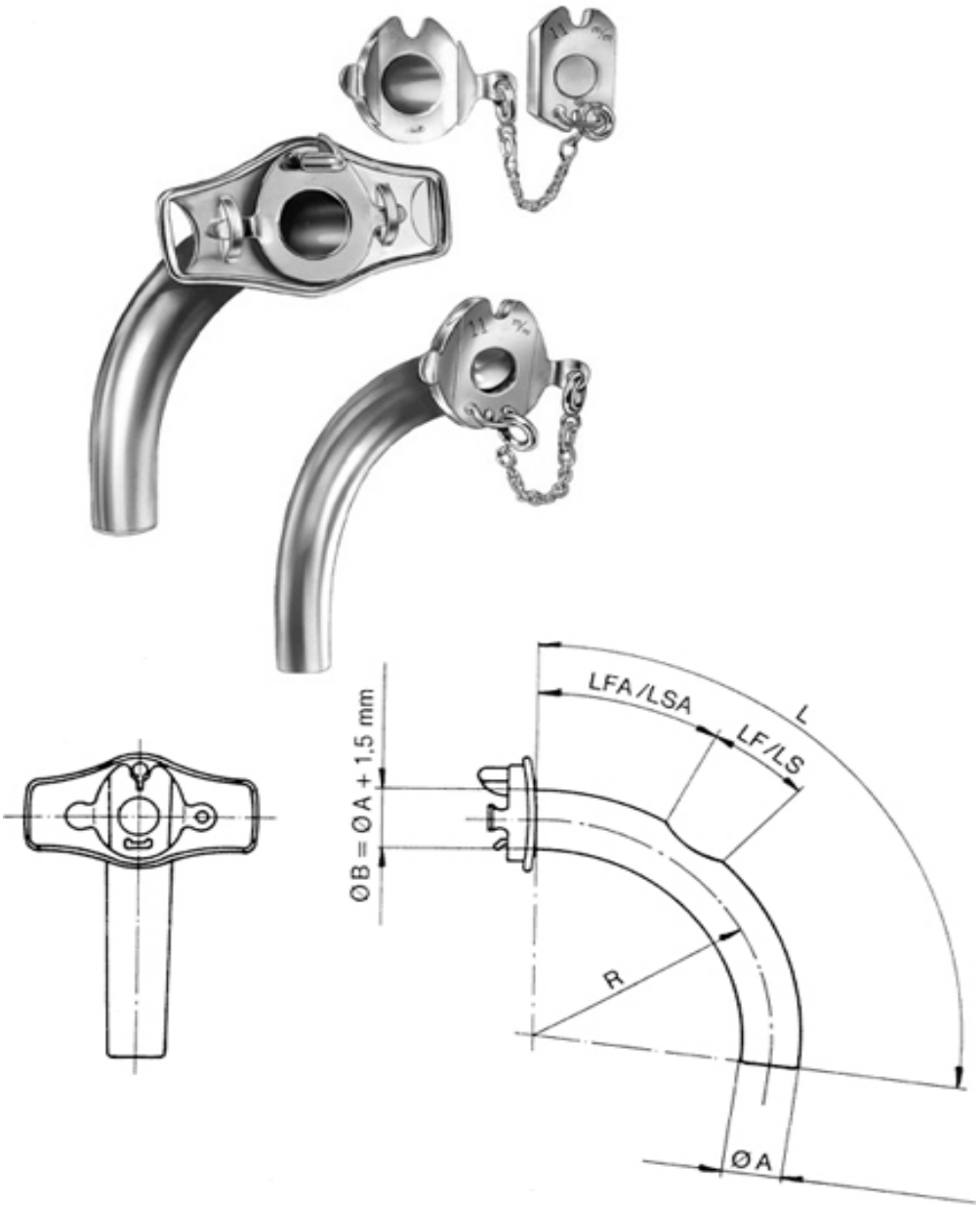

16-533-08
Speaking Tube Ø 8 mm length of tube 65 mm with sliding valve outer tube window inner tube window German silver
16-533-09
Speaking Tube Ø 9 mm length of tube 70 mm with sliding valve outer tube window inner tube window German silver
16-533-10
Speaking Tube Ø 10 mm length of tube 75 mm with sliding valve outer tube window inner tube window German silver
16-533-11
Speaking Tube Ø 11 mm length of tube 80 mm with sliding valve outer tube window inner tube window German silver
16-533-12
Speaking Tube Ø 12 mm length of tube 85 mm with sliding valve outer tube window inner tube window German silver
16-533-13
Speaking Tube Ø 13 mm length of tube 90 mm with sliding valve outer tube window inner tube window German silver

SafeMed Industry
Muslim Masjid Street,
Opp Muslim Masjid, Roras Road,
Muzaffar Pur, Sialkot 51310 Pakistan.

Phone: +92 523572570
Mobile: +92 314 726 202
WhatsApp: +92 314 726 202

Website: Safe-Med.Co
E-Mail: Sales@Safe-Med.Co

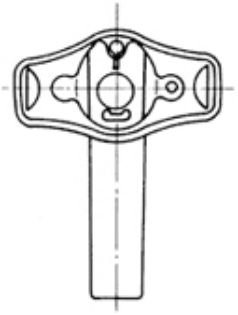

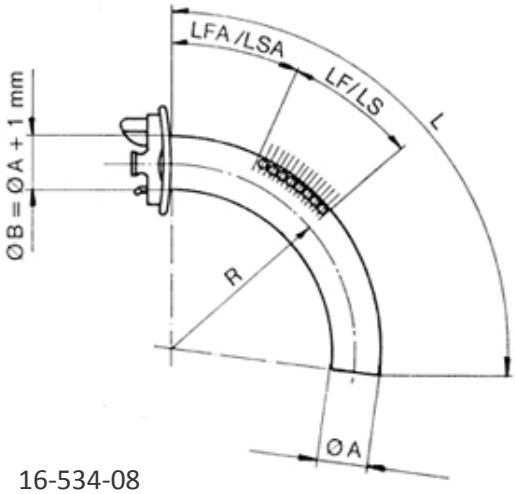

16-534-08

Speaking Tube Ø 8 mm length of tube 65 mm with sliding valve outer tube sieve inner tube window German silver

16-534-09

Speaking Tube Ø 9 mm length of tube 70 mm with sliding valve outer tube sieve inner tube window German silver

16-534-10

Speaking Tube Ø 10 mm length of tube 75 mm with sliding valve outer tube sieve inner tube window German silver

16-534-11

Speaking Tube Ø 11 mm length of tube 80 mm with sliding valve outer tube sieve inner tube window German silver

16-534-12

Speaking Tube Ø 12 mm length of tube 85 mm with sliding valve outer tube sieve inner tube window German silver

16-534-13

Speaking Tube Ø 13 mm length of tube 90 mm with sliding valve outer tube sieve inner tube window German silver

SafeMed Industry
Muslim Masjid Street,
Opp Muslim Masjid, Roras Road,
Muzaffar Pur, Sialkot 51310 Pakistan.

Phone: +92 523572570
Mobile: +92 314 726 202
WhatsApp: +92 314 726 202

Website: Safe-Med.Co
E-Mail: Sales@Safe-Med.Co

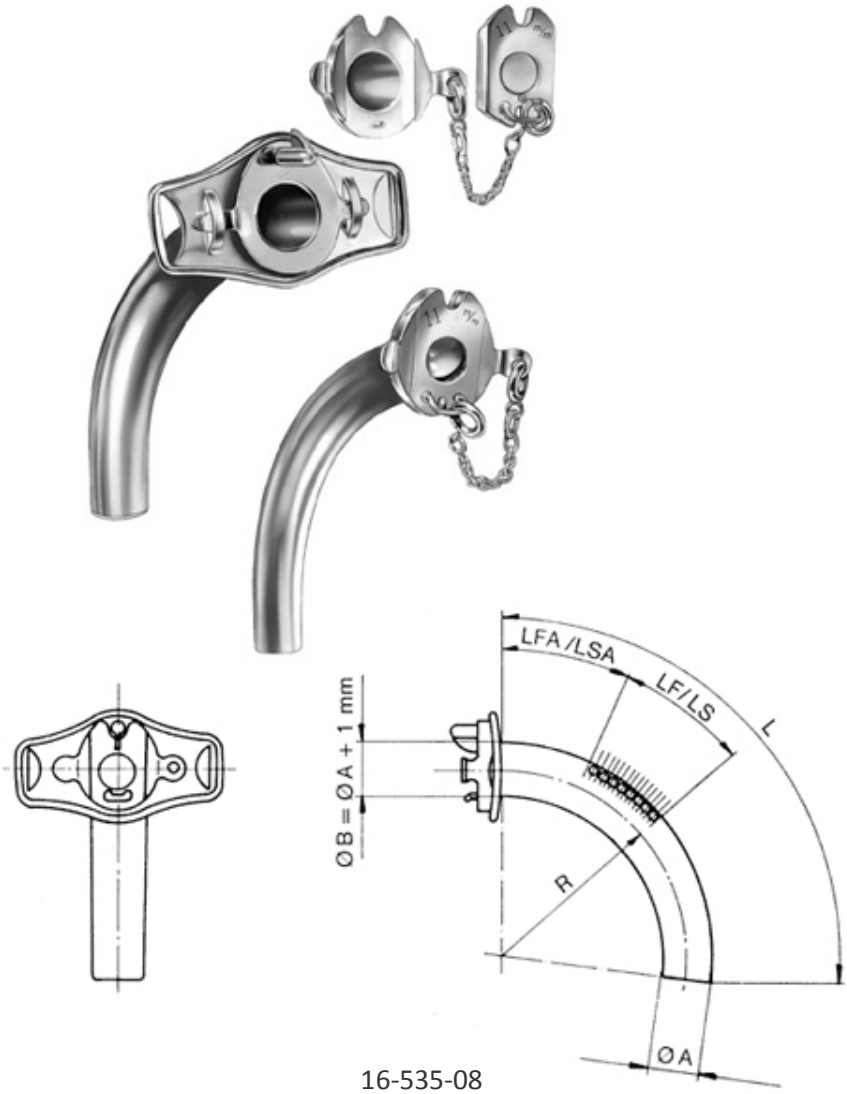

16-535-08
Speaking Tube Ø 8 mm length of tube 65 mm with sliding valve outer tube sieve inner tube sieve German silver
16-535-09
Speaking Tube Ø 9 mm length of tube 70 mm with sliding valve outer tube sieve inner tube sieve German silver
16-535-10
Speaking Tube Ø 10 mm length of tube 75 mm with sliding valve outer tube sieve inner tube sieve German silver
16-535-11
Speaking Tube Ø 11 mm length of tube 80 mm with sliding valve outer tube sieve inner tube sieve German silver
16-535-12
Speaking Tube Ø 12 mm length of tube 85 mm with sliding valve outer tube sieve inner tube sieve German silver
16-535-13
Speaking Tube Ø 13 mm length of tube 90 mm with sliding valve outer tube sieve inner tube sieve German silver

SafeMed Industry
Muslim Masjid Street,
Opp Muslim Masjid, Roras Road,
Muzaffar Pur, Sialkot 51310 Pakistan.

Phone: +92 523572570
Mobile: +92 314 726 202
WhatsApp: +92 314 726 202

Website: Safe-Med.Co
E-Mail: Sales@Safe-Med.Co

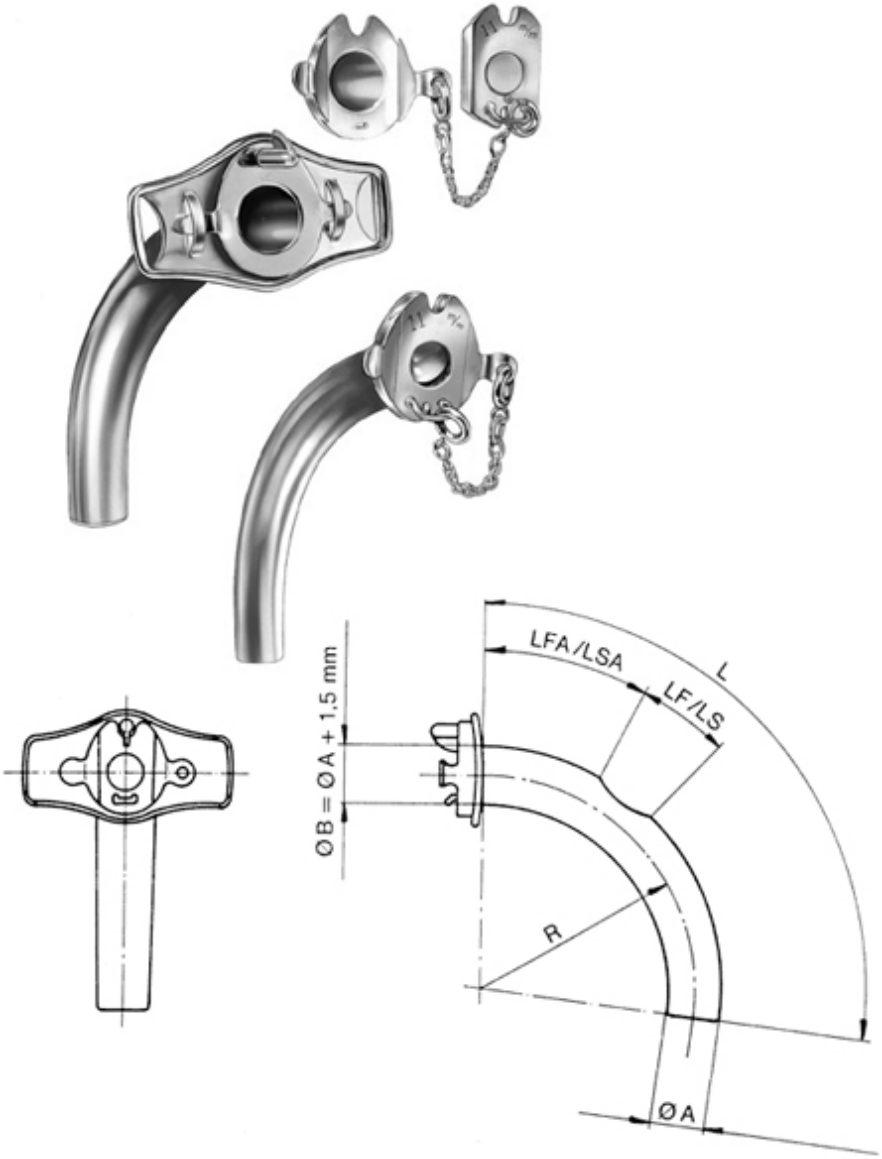

16-536-08
Speaking Tube Ø 8 mm length of tube 65 mm with sliding valve outer tube closed inner tube closed silver
16-536-09
Speaking Tube Ø 9 mm length of tube 70 mm with sliding valve outer tube closed inner tube closed silver
16-536-10
Speaking Tube Ø 10 mm length of tube 75 mm with sliding valve outer tube closed inner tube closed silver
16-536-11
Speaking Tube Ø 11 mm length of tube 80 mm with sliding valve outer tube closed inner tube closed silver
16-536-12
Speaking Tube Ø 12 mm length of tube 85 mm with sliding valve outer tube closed inner tube closed silver
16-536-13
Speaking Tube Ø 13 mm length of tube 90 mm with sliding valve outer tube closed inner tube closed silver

SafeMed Industry
Muslim Masjid Street,
Opp Muslim Masjid, Roras Road,
Muzaffar Pur, Sialkot 51310 Pakistan.

Phone: +92 523572570
Mobile: +92 314 726 202
WhatsApp: +92 314 726 202

Website: Safe-Med.Co
E-Mail: Sales@Safe-Med.Co

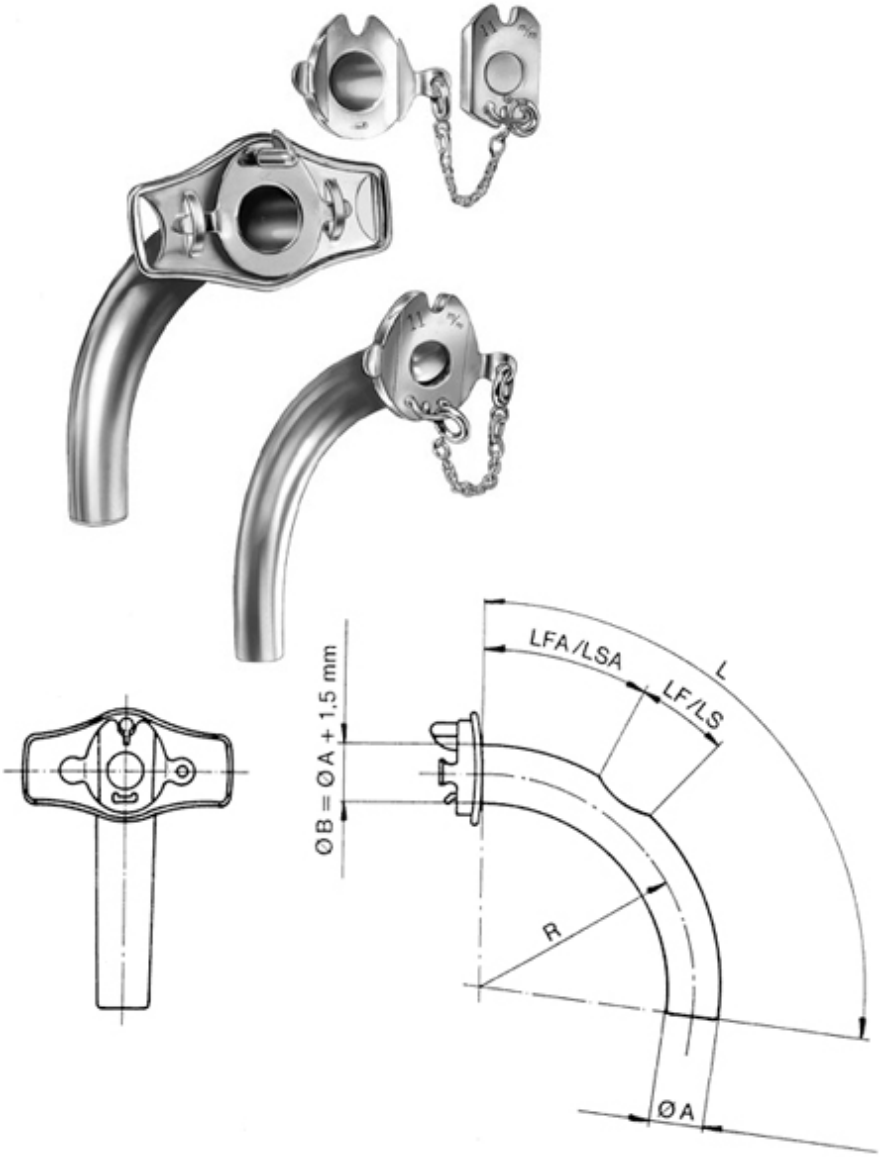

16-537-08
Speaking Tube Ø 8 mm length of tube 65 mm with sliding valve outer tube window inner tube window silver
16-537-09
Speaking Tube Ø 9 mm length of tube 70 mm with sliding valve outer tube window inner tube window silver
16-537-10
Speaking Tube Ø 10 mm length of tube 75 mm with sliding valve outer tube window inner tube window silver
16-537-11
Speaking Tube Ø 11 mm length of tube 80 mm with sliding valve outer tube window inner tube window silver
16-537-12
Speaking Tube Ø 12 mm length of tube 85 mm with sliding valve outer tube window inner tube window silver
16-537-13
Speaking Tube Ø 13 mm length of tube 90 mm with sliding valve outer tube window inner tube window silver

SafeMed Industry
Muslim Masjid Street,
Opp Muslim Masjid, Roras Road,
Muzaffar Pur, Sialkot 51310 Pakistan.

Phone: +92 523572570
Mobile: +92 314 726 202
WhatsApp: +92 314 726 202

Website: Safe-Med.Co
E-Mail: Sales@Safe-Med.Co

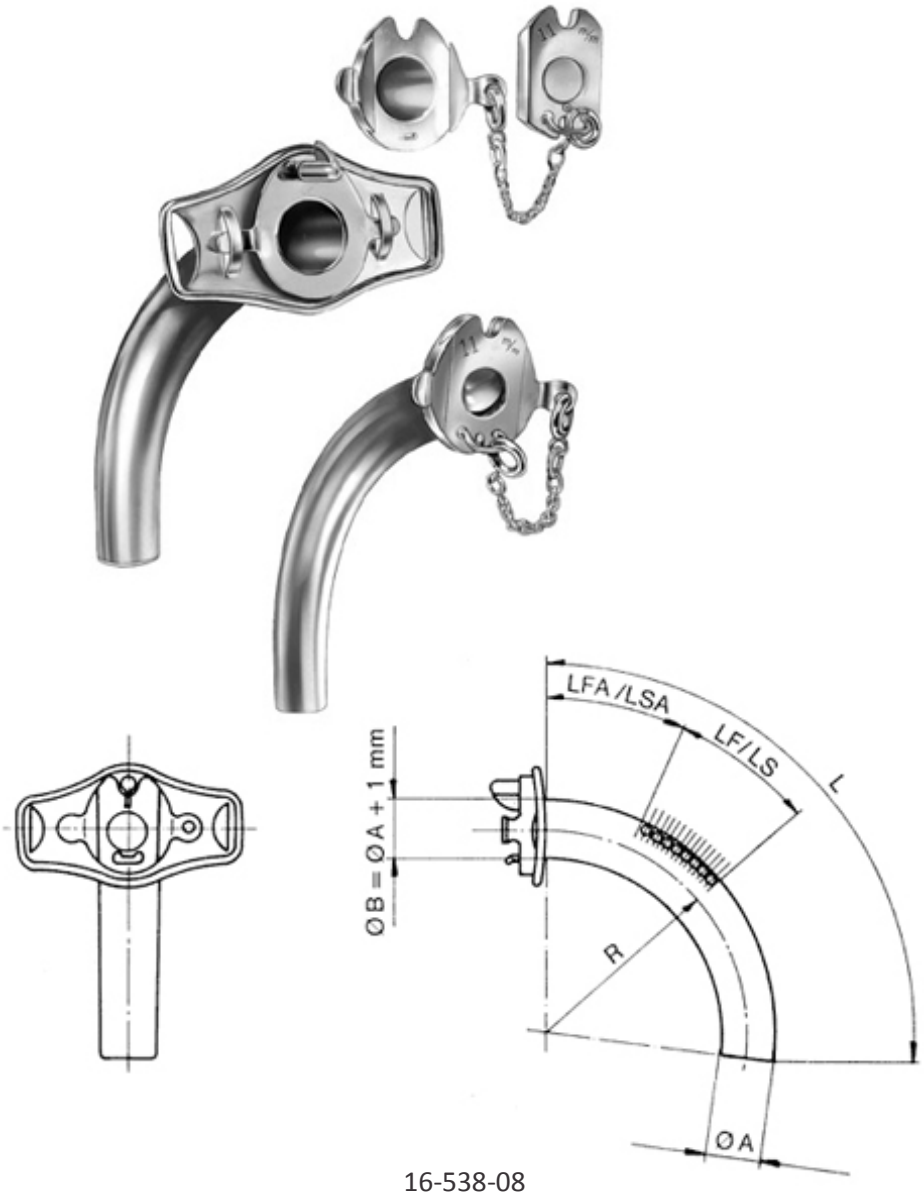

16-538-08
Speaking Tube Ø 8 mm length of tube 65 mm with sliding valve outer tube sieve inner tube window silver
16-538-09
Speaking Tube Ø 9 mm length of tube 70 mm with sliding valve outer tube sieve inner tube window silver
16-538-10
Speaking Tube Ø 10 mm length of tube 75 mm with sliding valve outer tube sieve inner tube window silver
16-538-11
Speaking Tube Ø 11 mm length of tube 80 mm with sliding valve outer tube sieve inner tube window silver
16-538-12
Speaking Tube Ø 12 mm length of tube 85 mm with sliding valve outer tube sieve inner tube window silver
16-538-13
Speaking Tube Ø 13 mm length of tube 90 mm with sliding valve outer tube sieve inner tube window silver

SafeMed Industry
Muslim Masjid Street,
Opp Muslim Masjid, Roras Road,
Muzaffar Pur, Sialkot 51310 Pakistan.

Phone: +92 523572570
Mobile: +92 314 726 202
WhatsApp: +92 314 726 202

Website: Safe-Med.Co
E-Mail: Sales@Safe-Med.Co

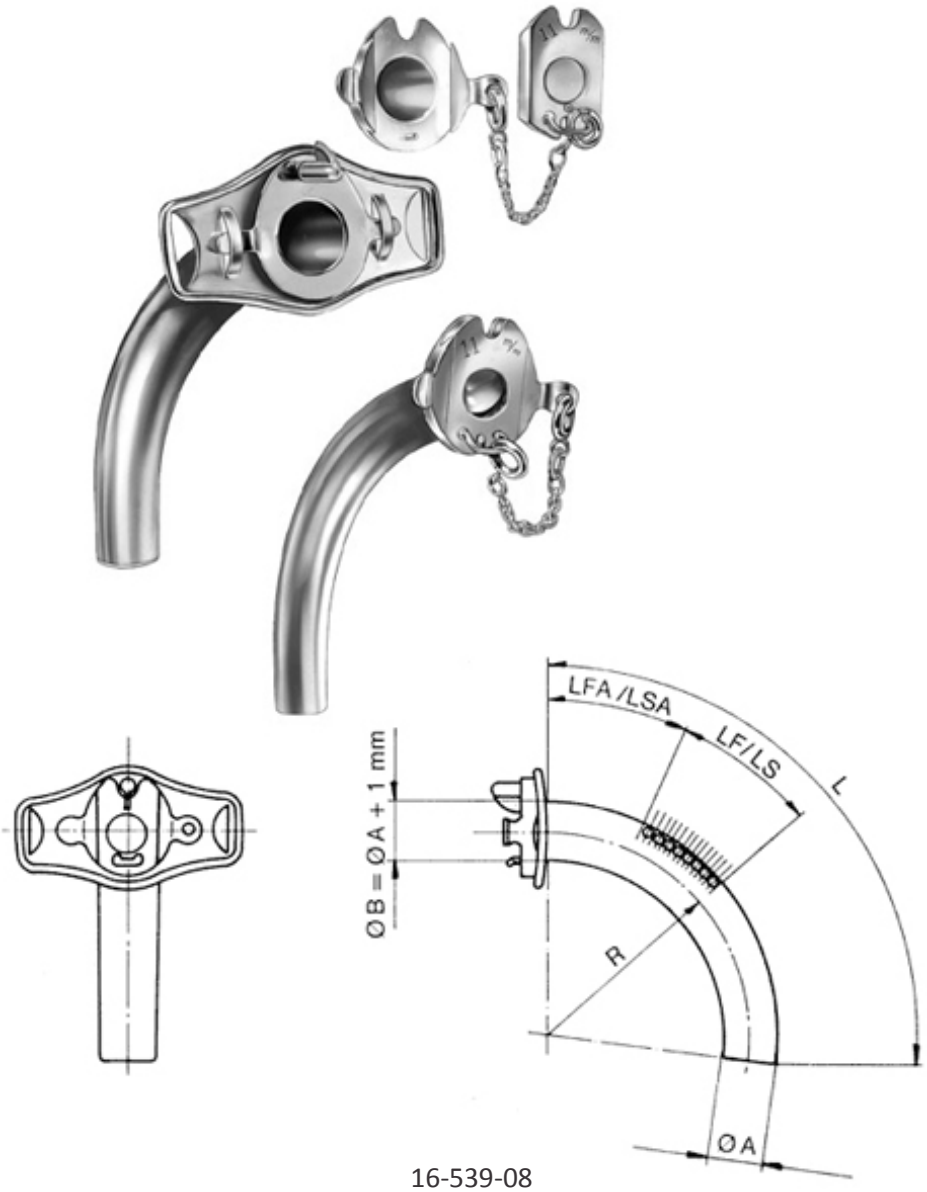

16-539-08
Speaking Tube Ø 8 mm length of tube 65 mm with sliding valve outer tube sieve inner tube sieve silver
16-539-09
Speaking Tube Ø 9 mm length of tube 70 mm with sliding valve outer tube sieve inner tube sieve silver
16-539-10
Speaking Tube Ø 10 mm length of tube 75 mm with sliding valve outer tube sieve inner tube sieve silver
16-539-11
Speaking Tube Ø 11 mm length of tube 80 mm with sliding valve outer tube sieve inner tube sieve silver
16-539-12
Speaking Tube Ø 12 mm length of tube 85 mm with sliding valve outer tube sieve inner tube sieve silver
16-539-13
Speaking Tube Ø 13 mm length of tube 90 mm with sliding valve outer tube sieve inner tube sieve silver

SafeMed Industry
Muslim Masjid Street,
Opp Muslim Masjid, Roras Road,
Muzaffar Pur, Sialkot 51310 Pakistan.

Phone: +92 523572570
Mobile: +92 314 726 202
WhatsApp: +92 314 726 202

Website: Safe-Med.Co
E-Mail: Sales@Safe-Med.Co

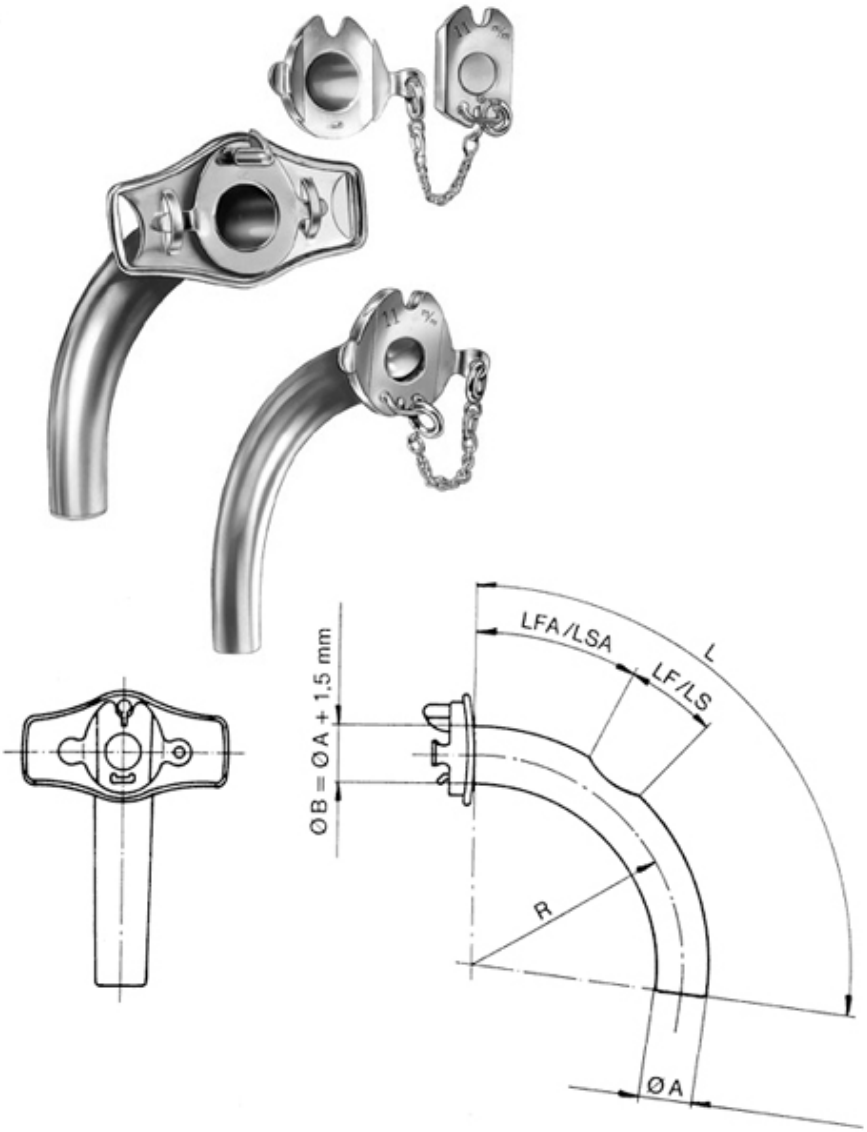

16-540-08
Speaking Tube Ø 8 mm length of tube 95 mm with sliding valve outer tube closed inner tube closed silver
16-540-09
Speaking Tube Ø 9 mm length of tube 95 mm with sliding valve outer tube closed inner tube closed silver
16-540-10
Speaking Tube Ø 10 mm length of tube 95 mm with sliding valve outer tube closed inner tube closed silver
16-540-11
Speaking Tube Ø 11 mm length of tube 95 mm with sliding valve outer tube closed inner tube closed silver
16-540-12
Speaking Tube Ø 12 mm length of tube 95 mm with sliding valve outer tube closed inner tube closed silver
16-540-13
Speaking Tube Ø 13 mm length of tube 95 mm with sliding valve outer tube closed inner tube closed silver

SafeMed Industry
Muslim Masjid Street,
Opp Muslim Masjid, Roras Road,
Muzaffar Pur, Sialkot 51310 Pakistan.

Phone: +92 523572570
Mobile: +92 314 726 202
WhatsApp: +92 314 726 202

Website: Safe-Med.Co
E-Mail: Sales@Safe-Med.Co

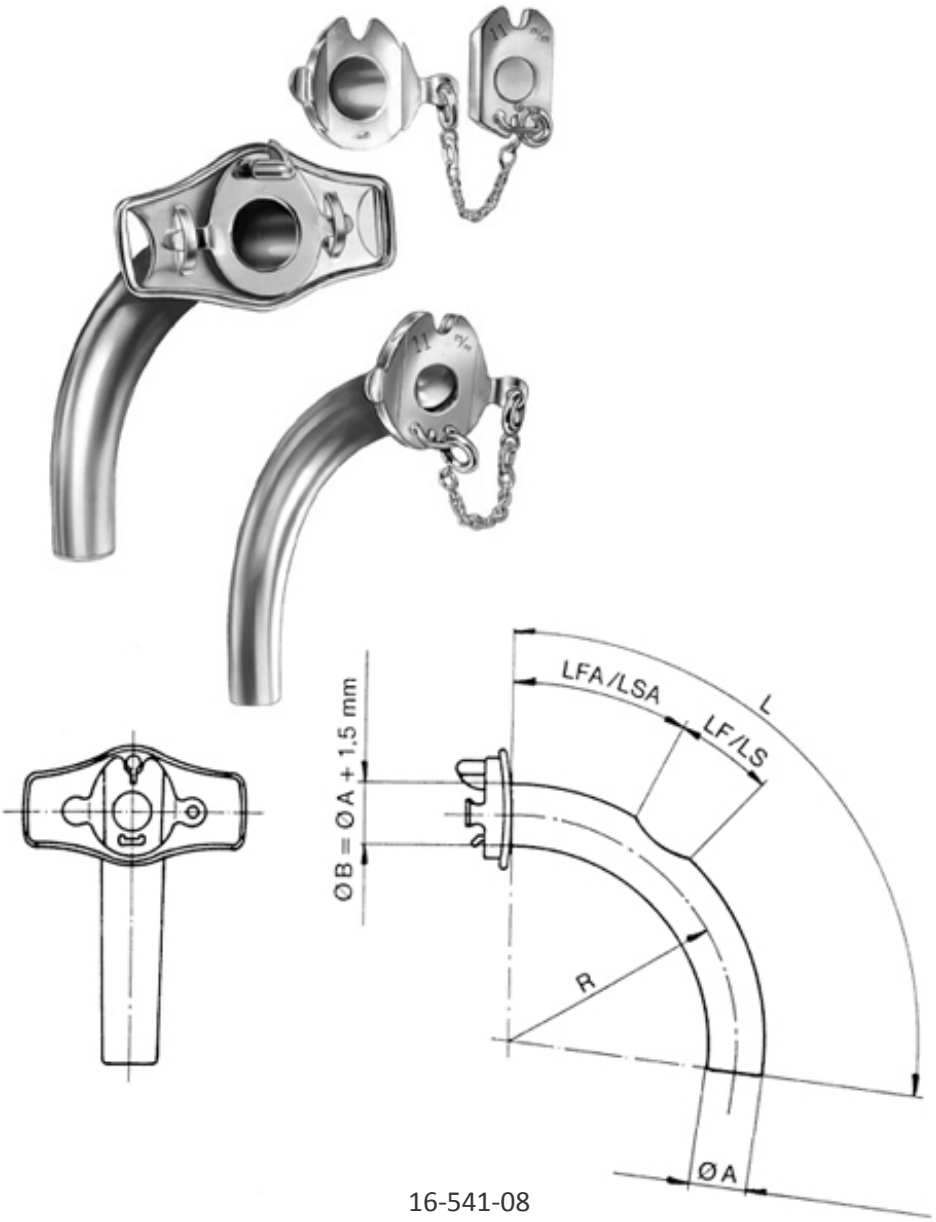

16-541-08
Speaking Tube Ø 8 mm length of tube 95 mm with sliding valve outer tube window inner tube window silver
16-541-09
Speaking Tube Ø 9 mm length of tube 95 mm with sliding valve outer tube window inner tube window silver
16-541-10
Speaking Tube Ø 10 mm length of tube 95 mm with sliding valve outer tube window inner tube window silver
16-541-11
Speaking Tube Ø 11 mm length of tube 95 mm with sliding valve outer tube window inner tube window silver
16-541-12
Speaking Tube Ø 12 mm length of tube 95 mm with sliding valve outer tube window inner tube window silver
16-541-13
Speaking Tube Ø 13 mm length of tube 95 mm with sliding valve outer tube window inner tube window silver

SafeMed Industry
Muslim Masjid Street,
Opp Muslim Masjid, Roras Road,
Muzaffar Pur, Sialkot 51310 Pakistan.

Phone: +92 523572570
Mobile: +92 314 726 202
WhatsApp: +92 314 726 202

Website: Safe-Med.Co
E-Mail: Sales@Safe-Med.Co

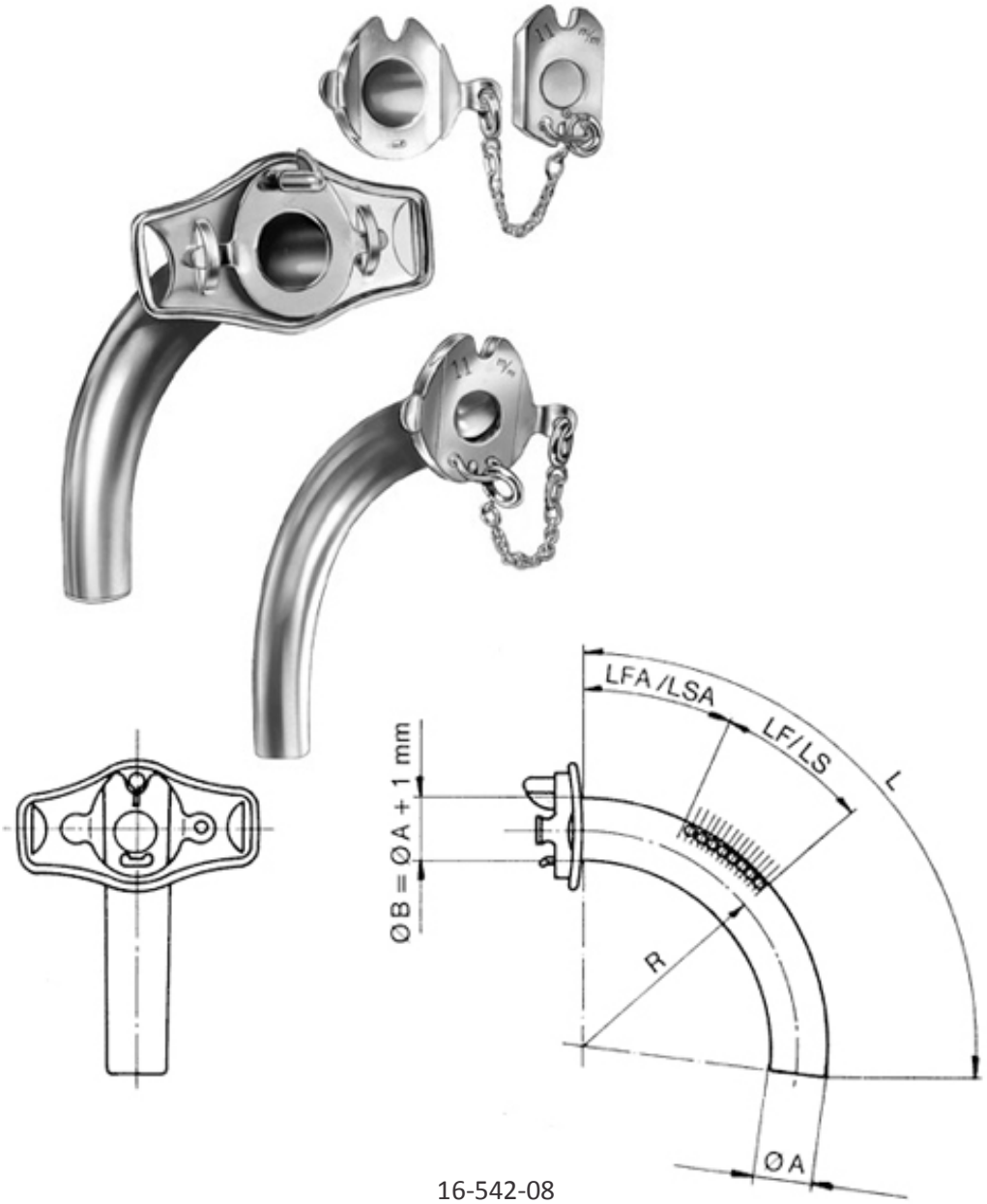

16-542-08
Speaking Tube Ø 8 mm length of tube 95 mm with sliding valve outer tube sieve inner tube window silver
16-542-09
Speaking Tube Ø 9 mm length of tube 95 mm with sliding valve outer tube sieve inner tube window silver
16-542-10
Speaking Tube Ø 10 mm length of tube 95 mm with sliding valve outer tube sieve inner tube window silver
16-542-11
Speaking Tube Ø 11 mm length of tube 95 mm with sliding valve outer tube sieve inner tube window silver
16-542-12
Speaking Tube Ø 12 mm length of tube 95 mm with sliding valve outer tube sieve inner tube window silver
16-542-13
Speaking Tube Ø 13 mm length of tube 95 mm with sliding valve outer tube sieve inner tube window silver

SafeMed Industry
Muslim Masjid Street,
Opp Muslim Masjid, Roras Road,
Muzaffar Pur, Sialkot 51310 Pakistan.

Phone: +92 523572570
Mobile: +92 314 726 202
WhatsApp: +92 314 726 202

Website: Safe-Med.Co
E-Mail: Sales@Safe-Med.Co

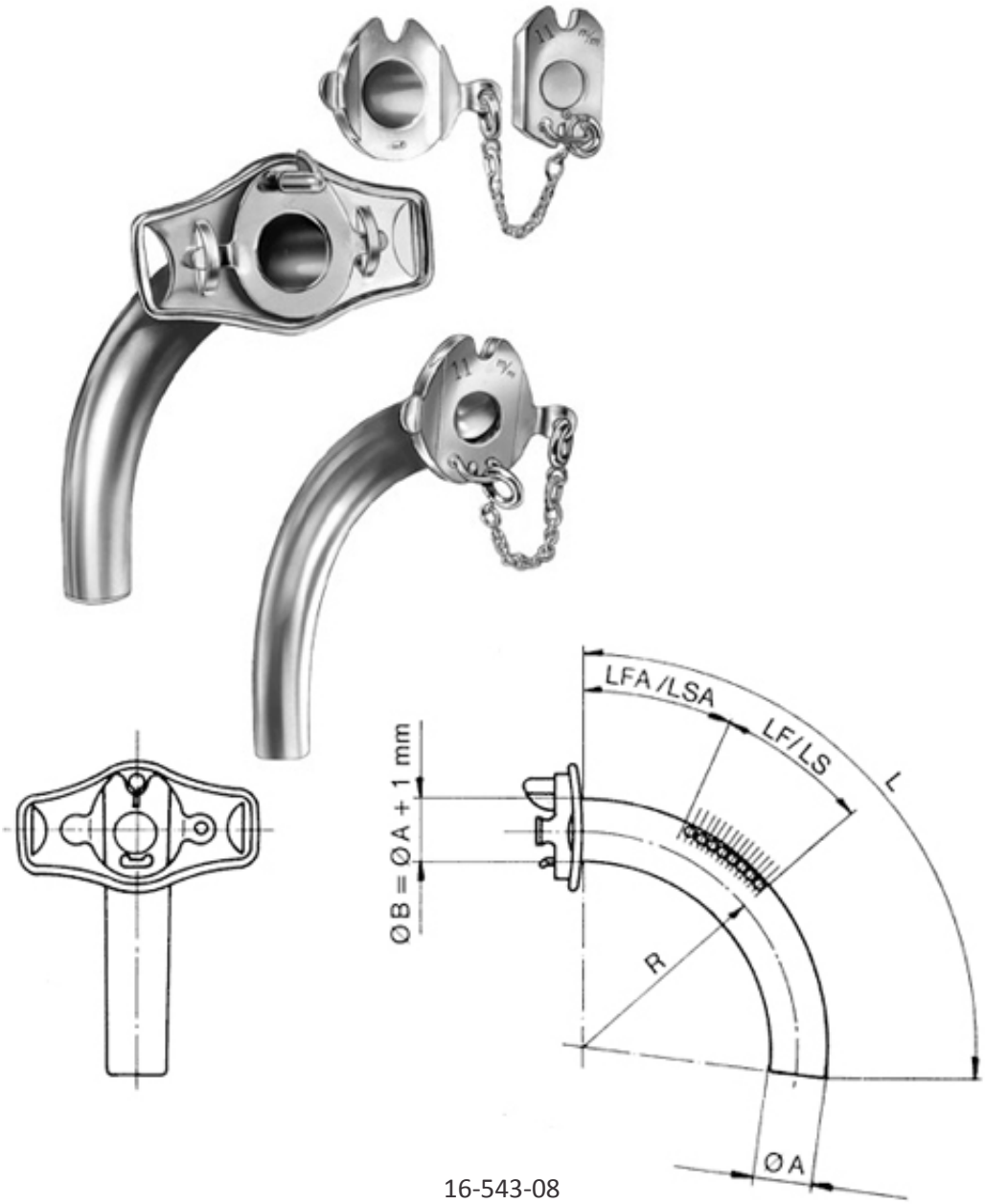

16-543-08
Speaking Tube Ø 8 mm length of tube 95 mm with sliding valve outer tube sieve inner tube sieve silver
16-543-09
Speaking Tube Ø 9 mm length of tube 95 mm with sliding valve outer tube sieve inner tube sieve silver
16-543-10
Speaking Tube Ø 10 mm length of tube 95 mm with sliding valve outer tube sieve inner tube sieve silver
16-543-11
Speaking Tube Ø 11 mm length of tube 95 mm with sliding valve outer tube sieve inner tube sieve silver
16-543-12
Speaking Tube Ø 12 mm length of tube 95 mm with sliding valve outer tube sieve inner tube sieve silver
16-543-13
Speaking Tube Ø 13 mm length of tube 95 mm with sliding valve outer tube sieve inner tube sieve silver

SafeMed Industry
Muslim Masjid Street,
Opp Muslim Masjid, Roras Road,
Muzaffar Pur, Sialkot 51310 Pakistan.

Phone: +92 523572570
Mobile: +92 314 726 202
WhatsApp: +92 314 726 202

Website: Safe-Med.Co
E-Mail: Sales@Safe-Med.Co

SAFEMED INSDUSTRY

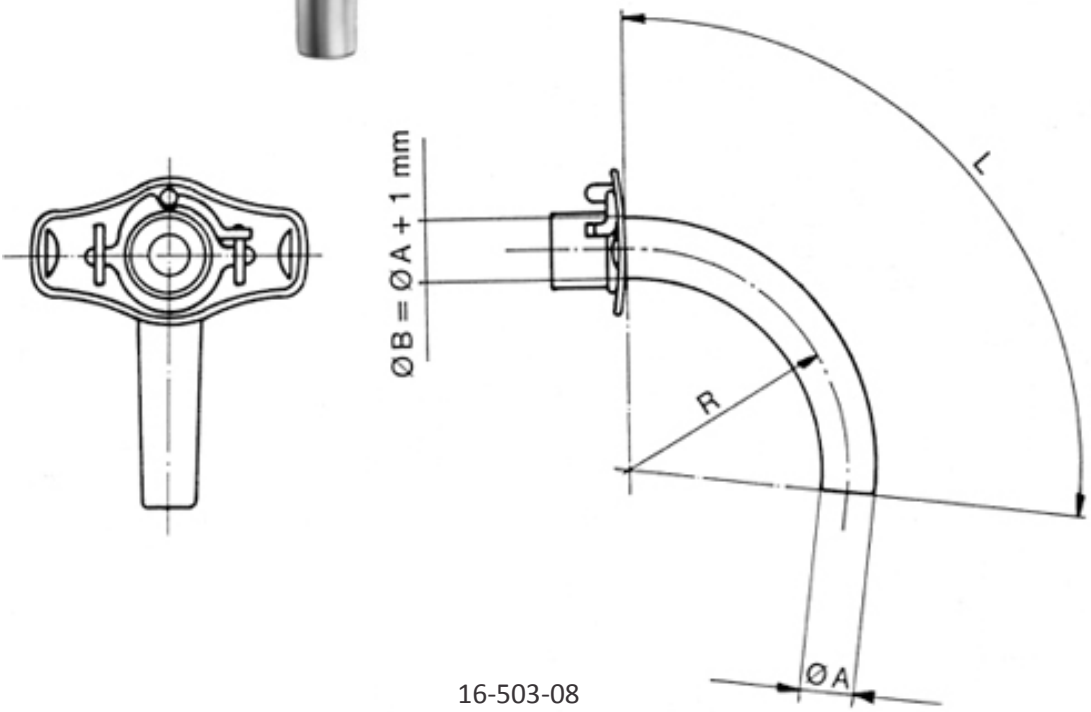

16-503-08
Lure Tracheal Tube Ø 8 mm length of tube 95 mm outer tube closed inner tube closed
16-503-09
Lure Tracheal Tube Ø 9 mm length of tube 95 mm outer tube closed inner tube closed
16-503-10
Lure Tracheal Tube Ø 10 mm length of tube 95 mm outer tube closed inner tube closed
16-503-11
Lure Tracheal Tube Ø 11 mm length of tube 95 mm outer tube closed inner tube closed
16-503-12
Lure Tracheal Tube Ø 12 mm length of tube 95 mm outer tube closed inner tube closed
16-503-13
Lure Tracheal Tube Ø 13 mm length of tube 95 mm outer tube closed inner tube closed

SafeMed Industry
Muslim Masjid Street,
Opp Muslim Masjid, Roras Road,
Muzaffar Pur, Sialkot 51310 Pakistan.

Phone: +92 523572570
Mobile: +92 314 726 202
WhatsApp: +92 314 726 202

Website: Safe-Med.Co
E-Mail: Sales@Safe-Med.Co

SAFEMED INSDUSTRY

SafeMed Industry

Muslim Masjid Street,
Opp Muslim Masjid, Roras Road,
Muzaffar Pur, Sialkot 51310 Pakistan.

Phone: +92 523572570

Mobile: +92 314 726 202
WhatsApp: +92 314 726 202

Website: Safe-Med.Co

E-Mail: Sales@Safe-Med.Co