SAFEMED INSDUSTRY

SafeMed Industry

ORTHOPEDIC IMPLANTS

Bone Screws

Large Screws with large Hexagonal Socket width across flat 3.5 mm

Washer
0520 Ø 11 mm
0522 Ø 13 mm

Nut 8 mm
0524
for 4.5 mm
Cortex Screw

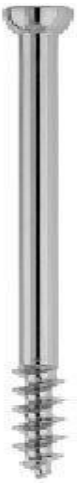

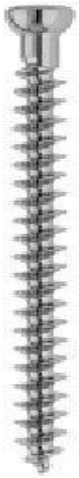

Ø of thread	4.5 mm	4.5 mm	4.5 mm	6.5 mm	6.5 mm	6.5 mm
Ø of core	3.0 mm	3.1 mm	3.0 mm	3.0 mm	3.0 mm	3.0 mm
Ø of shaft		4.5 mm	3.0 mm	4.5 mm	4.5 mm	
Ø of head	8.0 mm	8.0 mm	8.0 mm	8.0 mm	8.0 mm	8.0
wrench size	3.5 mm	3.5 mm	3.5 mm	3.5 mm	3.5 mm	3.5 mm
Length						
14 mm	0200					
16 mm	0202					
18 mm	0204					
20 mm	0206		0350			
22 mm	0208	0280				
24 mm	0210	0282				
25 mm			0352			0480
26 mm	0212	0284				
28 mm	0214	0286				
30 mm	0216	0288	0354	0382		0482
32 mm	0218	0290				
34 mm	0220	0292				
35 mm			0356	0384		0484
36 mm	0222	0294				
38 mm	0224	0296				
40 mm	0226	0298	0358	0386	0434	0486
42 mm	0228	0300				
44 mm	0230	0302				
45 mm			0360	0388	0436	0488
46 mm	0232	0304				
48 mm	0234	0306				
50 mm	0236	0308	0362	0390	0438	0490
52 mm	0238	0310				
54 mm	0240	0312				
55 mm			0364	0392	0440	0492
56 mm	0242	0314				
58 mm	0244	0316				
60 mm	0246	0318	0366	0394	0442	0494
65 mm	0248	0320	0368	0396	0444	0496
70 mm	0250	0322	0370	0398	0446	0498
75 mm	0254	0324	0371	0400	0448	0500
80 mm	0260	0326	0372	0402	0450	0502
85 mm	0262	0328		0404	0452	0504
90 mm	0264	0330		0406	0454	0506
95 mm	0266	0332		0408	0456	0508
100 mm	0268	0334		0410	0458	0510
105 mm	0269	0336		0412	0460	0512
110 mm	0270	0338		0414	0462	0514
115 mm	0271			0415	0464	0516
120 mm	0272			0416	0466	0518

SAFEMED INSDUSTRY

Washer
0520TI Ø 11 mm
0522TI Ø 13 mm

Nut 8 mm
0524TI
for 4.5 mm
Cortex Screw

TITANIUM
Bone Screws

Large Screws with large Hexagonal
Socket width across flat 3.5 mm

Ø of thread	4.5 mm	4.5 mm	4.5 mm	6.5 mm	6.5 mm	6.5 mm
Ø of core	3.0 mm	3.1 mm	3.0 mm	3.0 mm	3.0 mm	3.0 mm
Ø of shaft		4.5 mm	3.0 mm	4.5 mm	4.5 mm	
Ø of head	8.0 mm	8.0 mm	8.0 mm	8.0 mm	8.0 mm	8.0
wrench size	3.5 mm	3.5 mm	3.5 mm	3.5 mm	3.5 mm	3.5 mm
Length						
14 mm	0200TI					
16 mm	0202TI					
18 mm	0204TI					
20 mm	0206TI		0350TI			
22 mm	0208TI	0280TI				
24 mm	0210TI	0282TI				
25 mm			0352TI			0480TI
26 mm	0212TI	0284TI				
28 mm	0214TI	0286TI				
30 mm	0216TI	0288TI	0354TI	0382TI		0482TI
32 mm	0218TI	0290TI				
34 mm	0220TI	0292TI				
35 mm			0356TI	0384TI		0484TI
36 mm	0222TI	0294TI				
38 mm	0224TI	0296TI				
40 mm	0226TI	0298TI	0358TI	0386TI	0434TI	0486TI
42 mm	0228TI	0300TI				
44 mm	0230TI	0302TI				
45 mm			0360TI	0388TI	0436TI	0488TI
46 mm	0232TI	0304TI				
48 mm	0234TI	0306TI				
50 mm	0236TI	0308TI	0362TI	0390TI	0438TI	0490TI
52 mm	0238TI	0310TI				
54 mm	0240TI	0312TI				
55 mm			0364TI	0392TI	0440TI	0492TI
56 mm	0242TI	0314TI				
58 mm	0244TI	0316TI				
60 mm	0246TI	0318TI	0366TI	0394TI	0442TI	0494TI
65 mm	0248TI	0320TI	0368TI	0396TI	0444TI	0496TI
70 mm	0250TI	0322TI	0370TI	0398TI	0446TI	0498TI
75 mm	0254TI	0324TI	0371TI	0400TI	0448TI	0500TI
80 mm	0260TI	0326TI	0372TI	0402TI	0450TI	0502TI
85 mm	0262TI	0328TI		0404TI	0452TI	0504TI
90 mm	0264TI	0330TI		0406TI	0454TI	0506TI
95 mm	0266TI	0332TI		0408TI	0456TI	0508TI
100 mm	0268TI	0334TI		0410TI	0458TI	0510TI
105 mm	0269TI	0336TI		0412TI	0460TI	0512TI
110 mm	0270TI	0338TI		0414TI	0462TI	0514TI
115 mm	0271TI			0415TI	0464TI	0516TI
120 mm	0272TI			0416TI	0466TI	0518TI

SAFEMED INSDUSTRY

Bone Screws, self tapping

Ø of thread	4.5 mm	4.5 mm
Ø of core	3.0 mm	
Ø of shaft		4.5 mm
Ø of head	8.0 mm	8.0 mm
Length		
14 mm	1200	
16 mm	1202	
18 mm	1204	
20 mm	1206	
22 mm	1208	1280
24 mm	1210	1282
25 mm		
26 mm	1212	1284
28 mm	1214	1286
30 mm	1216	1288
32 mm	1218	1290
34 mm	1220	1292
35 mm		
36 mm	1222	1294
38 mm	1224	1296
40 mm	1226	1298
42 mm	1228	1300
44 mm	1230	1302
45 mm		
46 mm	1232	1304
48 mm	1234	1306
50 mm	1236	1308
52 mm	1238	1310
54 mm	1240	1312
55 mm		
56 mm	1242	1314
58 mm	1244	1316
60 mm	1246	1318
65 mm	1248	1320
70 mm	1250	1322
75 mm	1252	1324
80 mm	1254	1326
85 mm	1256	1328
90 mm	1258	1330
95 mm	1260	1332
100 mm	1262	1334
105 mm	1264	1336
110 mm	1266	1338

SAFEMED INSDUSTRY

Narrow Compression Plates

Profile: 12 x 3.8 mm
Distance between holes 16 and 25 mm

	Lentgh	Holes		Lentgh	Holes
0600	39 mm	2	**0616**	167 mm	10
0602	55 mm	3	**0618**	183 mm	11
0604	71 mm	4	**0620**	199 mm	12
0606	87 mm	5	**0622**	215 mm	13
0608	103 mm	6	**0624**	231 mm	14
0610	119 mm	7	**0626**	247 mm	15
0612	135 mm	8	**0628**	263 mm	16
0614	151 mm	9			

Broad Compression Plates

Profile: 16 x 4.8 mm
Distance between holes 16 and 25 mm

	Lentgh	Holes		Lentgh	Holes
0640	103 mm	6	**0654**	215 mm	13
0642	119 mm	7	**0656**	231 mm	14
0644	135 mm	8	**0658**	247 mm	15
0646	151 mm	9	**0660**	263 mm	16
0648	167 mm	10	**0662**	279 mm	17
0650	183 mm	11	**0664**	295 mm	18
0652	199 mm	12			

Semi-Tubular Plates

Profile: Half Tube Ø 12 x 1 mm
Distance between holes 16 and 26 mm

	Lentgh	Holes		Lentgh	Holes
0670	39 mm	2	**0682**	135 mm	8
0672	55 mm	3	**0684**	151 mm	9
0674	71 mm	4	**0686**	167 mm	10
0676	87 mm	5	**0688**	183 mm	11
0678	103 mm	6	**0690**	199 mm	12
0680	119 mm				

SAFEMED INSDUSTRY

Spoon-Plates
Shaft with V-profile for fixation edge of tibia on frontal

0692	Shaft with 5 holes, 100 mm long
0694	Shaft with 6 holes, 120 mm long

T-Plates

0700	Shaft with 3 holes, 68 mm long
0702	Shaft with 4 holes, 84 mm long
0704	Shaft with 5 holes, 100 mm long
0706	Shaft with 6 holes, 116 mm long
0708	Shaft with 8 holes, 148 mm long

T-Buttress

0714	4 holes
0716	5 holes
0718	6 holes

L-Buttress

0720	4 holes left
0722	4 holes right
0724	6 holes left
0726	6 holes right
0728	8 holes left
0730	8 holes right

SAFEMED INSDUSTRY

Spoon-Plates
Shaft with V-profile for fixation edge of tibia on frontal

0692TI	Shaft with 5 holes, 100 mm long
0694TI	Shaft with 6 holes, 120 mm long

T-Plates

0700TI	Shaft with 3 holes, 68 mm long
0702TI	Shaft with 4 holes, 84 mm long
0704TI	Shaft with 5 holes, 100 mm long
0706TI	Shaft with 6 holes, 116 mm long
0708TI	Shaft with 8 holes, 148 mm long

T-Buttress

0714TI	4 holes
0716TI	5 holes
0718TI	6 holes

L-Buttress

0720TI	4 holes left
0722TI	4 holes right
0724TI	6 holes left
0726TI	6 holes right
0728TI	8 holes left
0730TI	8 holes right

SAFEMED INSDUSTRY

Straight Plates

Broad Lengthening Plates with 8 holes

	Amount of lengthening	Length
0750	30 mm	135 mm
0752	40 mm	145 mm
0754	50 mm	155 mm
0756	60 mm	165 mm

Narrow Lengthening Plates with 8 holes

	Amount of lengthening	Length
0760	30 mm	135 mm
0762	40 mm	145 mm
0764	50 mm	155 mm
0766	60 mm	165 mm
0768	70 mm	175 mm
0770	80 mm	185 mm

Broad Lengthening Plates with 10 holes

	Amount of lengthening	Length
0772	50 mm	179 mm
0774	60 mm	189 mm
0776	70 mm	199 mm
0778	80 mm	209 mm
0779	90 mm	219 mm
0780	100 mm	229 mm
0782	110 mm	239 mm
0784	120 mm	249 mm

SAFEMED INSDUSTRY

Plates for Distal Femur
For use with 4.5 mm Cortex Screws
Condylar Buttress Plates
Primary Indication: As a Buttress for femoral condyles with multiple fragments

	Length	Holes in Shaft
0800	158 mm	7 left
0802	158 mm	7 right
0804	190 mm	9 left
0806	190 mm	9 right
0808	221 mm	11 left
0810	221 mm	11 right
0812	253 mm	13 left
0814	253 mm	13 right
0816	285 mm	15 left
0818	285 mm	15 right

Cobra Head Plates
Primary Indication: Hip Arthrodesis

	Length	Holes in Shaft
0820	170 mm	8
0822	186 mm	9
0824	202 mm	10
0826	218 mm	11

Lateral Tibia Head Plate

0830	5	holes right
0831	5	holes left
0832	7	holes right
0833	7	holes left
0834	9	holes right
0835	9	holes left
0836	11	holes right
0837	11	holes left
0838	13	holes right
0839	13	holes left

SAFEMED INSDUSTRY

Anatomical Bone Plates

Distal Tibia Plates
width of shaft: 16 mm
width of head: 22 mm

	Side	Length	Holes
0850	right	122 mm	7
0852	left	122 mm	7
0854	right	158 mm	9
0856	left	158 mm	9
0858	right	194 mm	11
0860	left	194 mm	11
0862	right	230 mm	13
0866	left	230 mm	13

Proximal Tibia Plates
width of shaft: 16 mm
width of head: 22 mm

	Side	Length	Holes
0870	right	122 mm	7
0872	left	122 mm	7
0874	right	158 mm	9
0876	left	158 mm	9
0878	right	194 mm	11
0880	left	194 mm	11
0882	right	230 mm	13
0884	left	230 mm	13

SAFEMED INSDUSTRY

Anatomical Bone Plates

Distal Femur Plates
width of shaft: 16 mm
width of head: 22 mm

	Side	Length	Holes
0886	right	122 mm	7
0888	left	122 mm	7
0890	right	158 mm	9
0892	left	158 mm	9
0894	right	194 mm	11
0896	left	194 mm	11
0898	right	230 mm	13
0900	left	230 mm	13

Distal Tibia Plates for Fibulae
width of shaft: 16 mm
width of head: 22 mm

	Side	Length	Holes
0902	right	122 mm	7
0904	left	122 mm	7
0906	right	158 mm	9
0908	left	158 mm	9
0910	right	194 mm	11
0912	left	194 mm	11
0914	right	230 mm	13
0916	left	230 mm	13

SAFEMED INSDUSTRY

Kerboul Plates

Tibia Plates
(left and right Plates)

0930	81 mm	7 right
0932	81 mm	7 left
0934	101 mm	9 right
0936	101 mm	9 left
0938	121 mm	11 right
0940	121 mm	11 left

Radius Plates

0944	2 Holes
0946	3 Holes
0948	4 Holes

Proximal Humerus Plates
Screws to be used: Ø 3.5 mm and 6.5 mm

0960	3 Holes	84 mm
0962	5 Holes	124 mm
0964	8 Holes	183 mm

Tibia Plates
(left and right Plates)

0968	100 mm	7 right
0970	100 mm	7 left
0972	140 mm	9 right
0974	140 mm	9 left
0976	160 mm	11 right
0978	160 mm	11 left
0980	160 mm	13 right
0982	160 mm	13 left

SAFEMED INSDUSTRY

1232 Drill Bits with end to fit quick coupling Ø 3.2 mm
1245 Drill Bits with end to fit quick coupling Ø 4.5 mm

0079 Tap, Ø 6.5 mm

0078 Tap, Ø 4.5 mm

0256
Tap Sleeve, Ø 3.5 mm, also for use
as Ø 3.2 mm Drill Guide

0260
Tap Sleeve, Ø 4.5 mm

0262
Drill Sleeve for Rund Hole Plates

SAFEMED INSDUSTRY

42-09-0092 Tap Handle

42-09-0106 Countersink, Ø 4.5 mm tip

42-09-0272 Neutral and Load Drill Guide Ø 4.5 mm

42-09-0280
Insert Drill Sleeve, 4.5 / 3.2 mm for
mm Drill Bit

42-09-0258
Pointed Drill guide

SAFEMED INSDUSTRY

42-09-0092 Tap Handle

42-09-0106 Countersink, Ø 4.5 mm tip

42-09-0272 Neutral and Load Drill Guide Ø 4.5 mm

42-09-0280
Insert Drill Sleeve, 4.5 / 3.2 mm for
mm Drill Bit

42-09-0258
Pointed Drill guide

SAFEMED INSDUSTRY

0438 Combination Wrench
width across flats 11 mm

0114 Depth Gauge for Ø 4.5 and Ø 6.5 mm Screws

0116 Sharp Hook

0184 Screw Forceps

0070	Bending Template 5 holes
0071	Bending Template 7 holes
0072	Bending Template 9 holes
0075	Bending Template 7 holes for small plates
0076	Bending Template 9 holes for small plates

SAFEMED INSDUSTRY

0436
8 mm screw-type Compression Device

0440
Articulated Tension Device with Indicator, span 20 mm. May also be used for Distraction of standard and small plates

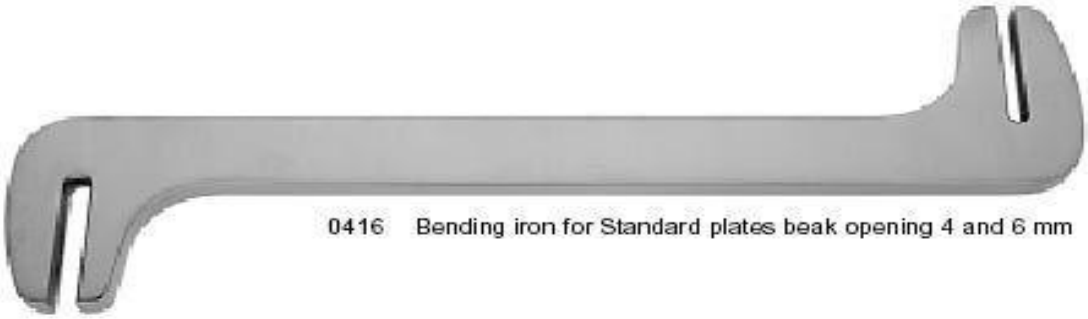

0416 Bending iron for Standard plates beak opening 4 and 6 mm

0442
Pin Wrench for Tension Device and Distractor

0420 Bending Device to bend straight and angled plates

Femoral Neck Plates, 130°
With one round Hole
For a Ø 4.5 mm Cortex Screw

	Blade Length
0100	70 mm
0102	75 mm
0104	80 mm
0106	85 mm
0108	90 mm
0110	95 mm
0112	100 mm
0114	105 mm
0116	110 mm

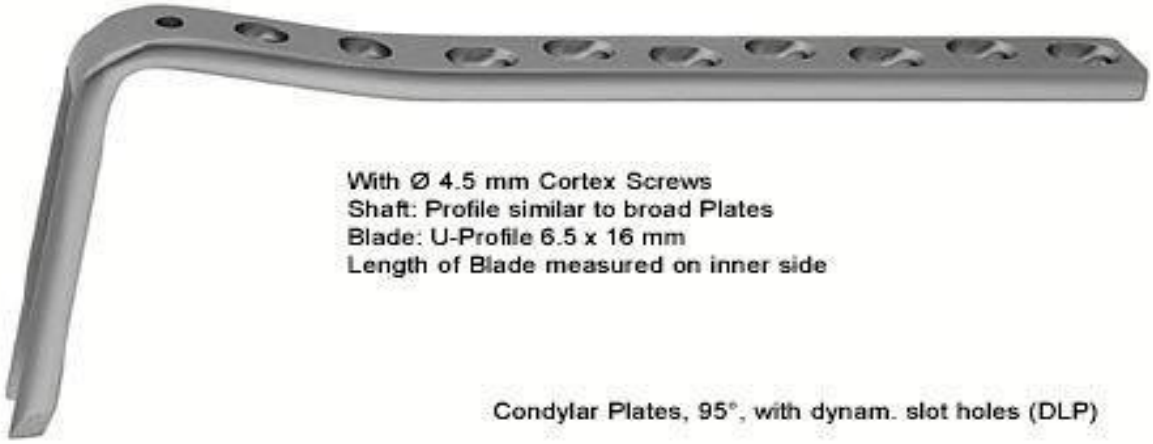

With Ø 4.5 mm Cortex Screws
Shaft: Profile similar to broad Plates
Blade: U-Profile 6.5 x 16 mm
Length of Blade measured on inner side

Condylar Plates, 95°, with dynam. slot holes (DLP)

	Length of Blades	Length of Plates	Holes
0120	50 mm	92 mm	5
0122	60 mm	92 mm	5
0124	70 mm	92 mm	5
0126	80 mm	92 mm	5
0128	50 mm	124 mm	7
0130	60 mm	124 mm	7
0132	70 mm	124 mm	7
0134	80 mm	124 mm	7
0136	50 mm	156 mm	9
0138	60 mm	156 mm	9
0140	70 mm	156 mm	9
0142	80 mm	156 mm	9
0144	50 mm	205 mm	12
0146	60 mm	205 mm	12
0148	70 mm	205 mm	12
0150	80 mm	205 mm	12

SAFEMED INSDUSTRY

Angled Blade Plates for Pertrochanteric Fractures

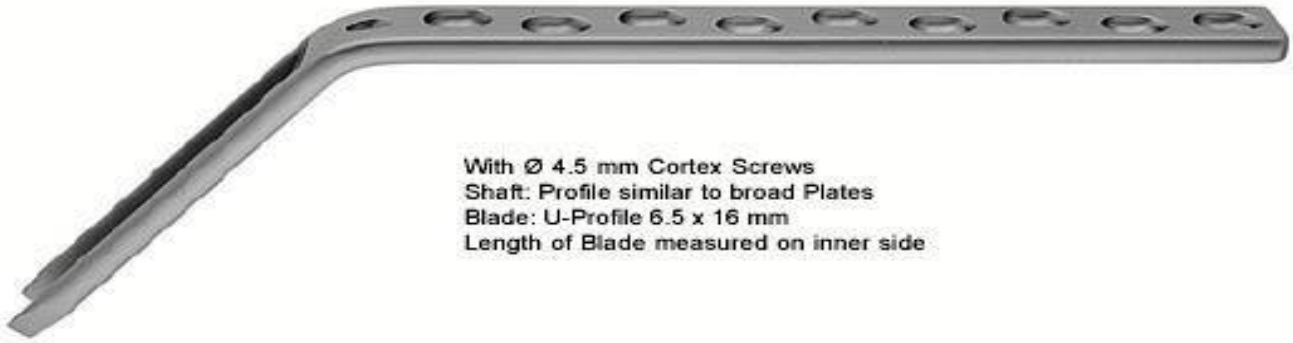

With Ø 4.5 mm Cortex Screws
Shaft: Profile similar to broad Plates
Blade: U-Profile 6.5 x 16 mm
Length of Blade measured on inner side

Angled Plates, 130°, with dynam. slot holes (DLP)

	Length of Blades	Length of Plates	Holes
0160	50 mm	75 mm	4
0162	60 mm	75 mm	4
0164	70 mm	75 mm	4
0166	75 mm	75 mm	4
0168	80 mm	75 mm	4
0170	85 mm	75 mm	4
0172	90 mm	75 mm	4
0174	95 mm	75 mm	4
0176	100 mm	75 mm	4
0178	105 mm	75 mm	4
0180	50 mm	104 mm	6
0182	60 mm	104 mm	6
0184	70 mm	104 mm	6
0186	80 mm	104 mm	6
0188	90 mm	104 mm	6
0190	70 mm	152 mm	9
0192	80 mm	152 mm	9
0194	90 mm	152 mm	9
0196	70 mm	200 mm	12
0198	80 mm	200 mm	12
0200	90 mm	200 mm	12

SAFEMED INSDUSTRY

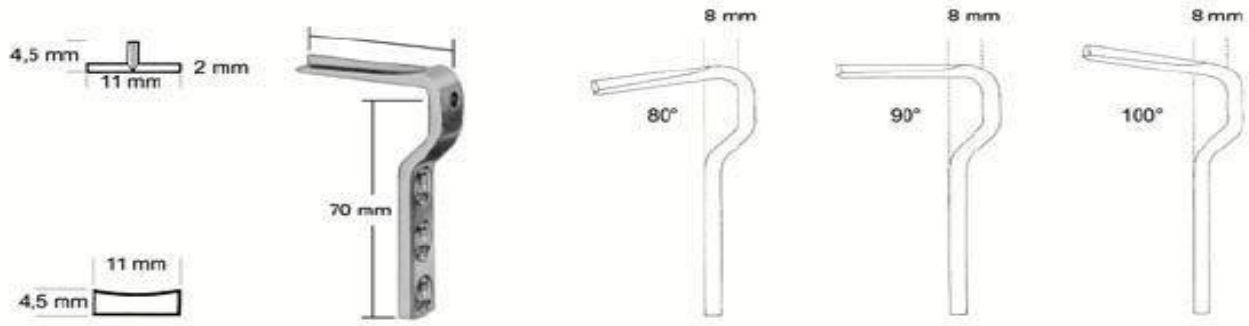

Length of Blade	Depth	80°	90°	100°
35 mm	8 mm	0222	0226	0230
45 mm	8 mm	0224	0228	0232

Length of Blade	Depth	90°
25 mm	7 mm	0236
32 mm	7 mm	0238
25 mm	12 mm	0240
32 mm	12 mm	0242

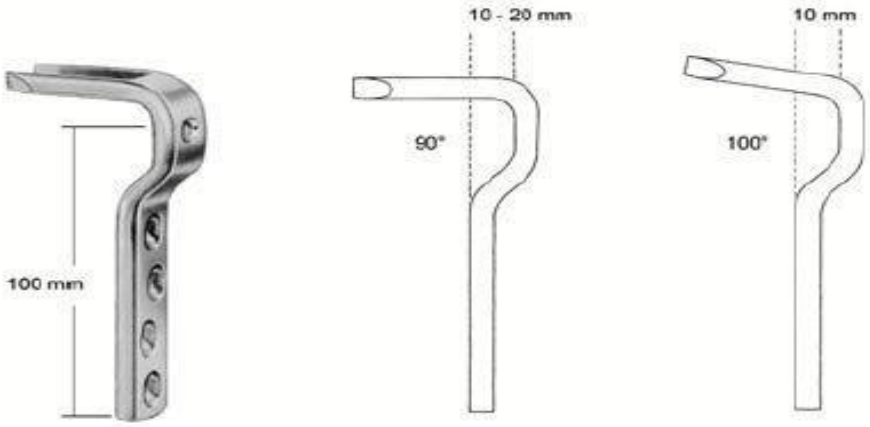

Length of Blade	Depth	90°	100°
40 mm	10 mm	0244	
50 mm	15 mm	0245	
60 mm	15 mm	0246	
60 mm	20 mm	0247	
60 mm	10 mm		0249

SAFEMED INSDUSTRY

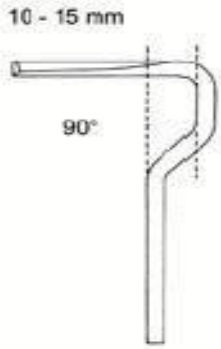

Length of Blade	Depth	90°
40 mm	10 mm	0250
50 mm	10 mm	0252
40 mm	15 mm	0254
50 mm	15 mm	0256

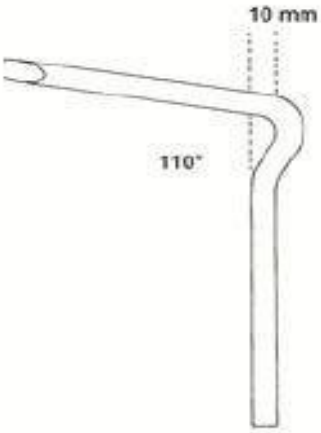

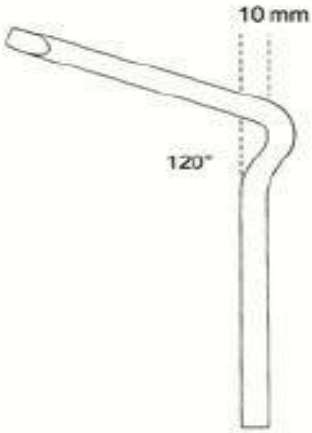

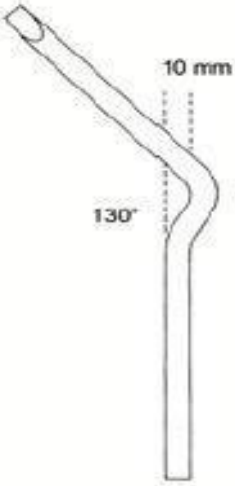

Length of Blade	110°	120°	130°
65 mm	0266	0260	0272
70 mm			0273
75 mm	0268	0262	0274
80 mm			0275
85 mm	0270	0264	0276
90 mm			0277
95 mm			0278
100 mm			0279
105 mm			0280
110 mm			0281

SAFEMED INSDUSTRY

Standard JEWETT Nail Heavy Duty 135° Angle

3 Holes, 90 mm Plate Length

Nail Length										
57 mm	63 mm	70 mm	76 mm	82 mm	89 mm	95 mm	102 mm	108 mm	114 mm	121 mm
0530	0531	0532	0533	0534	0535	0536	0537	0538	0539	0540

5 Holes, 130 mm Plate Length

Nail Length										
57 mm	63 mm	70 mm	76 mm	82 mm	89 mm	95 mm	102 mm	108 mm	114 mm	121 mm
0541	0542	0543	0544	0545	0546	0547	0548	0549	0550	0551

7 Holes, 165 mm Plate Length

Nail Length										
57 mm	63 mm	70 mm	76 mm	82 mm	89 mm	95 mm	102 mm	108 mm	114 mm	121 mm
0552	0553	0554	0555	0556	0557	0558	0559	0560	0561	0562

10 Holes, 220 mm Plate Length

Nail Length										
57 mm	63 mm	70 mm	76 mm	82 mm	89 mm	95 mm	102 mm	108 mm	114 mm	121 mm
0563	0564	0565	0566	0567	0568	0569	0570	0571	0572	0573

12 Holes, 260 mm Plate Length

Nail Length										
57 mm	63 mm	70 mm	76 mm	82 mm	89 mm	95 mm	102 mm	108 mm	114 mm	121 mm
0574	0575	0576	0577	0578	0579	0580	0581	0582	0583	0584

SAFEMED INSDUSTRY

Instruments for Angled Plates

0294
Triple Drill Guide with fixed angle 130°

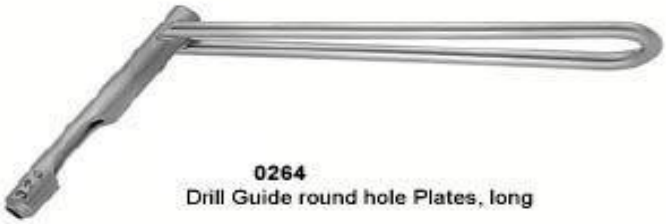

0264
Drill Guide round hole Plates, long

0300
Reamer with end for Quick Coupling

0296
Chisel Guide adjustable angle

0306 Inserter / Extractor

0308 Seating Chisel

0304 Slotted Hammer

0298 Impactor

SAFEMED INSDUSTRY

Instruments for Angled Plates

0314
Triangular Positioning Plate 80°/70°/30°

0316
Triangular Positioning Plate 90°/50°/40°

0312
Triangular Positioning Plate 100°/60°/20°

0310
Quadrangular Positioning Plate
110°/90°/90°/70°

0302
Condylar Plate Guide

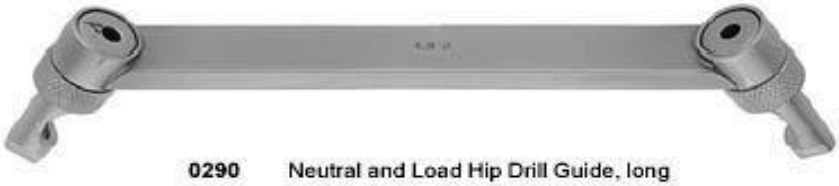

0290 Neutral and Load Hip Drill Guide, long

SAFEMED INSDUSTRY

0300 Calibrated Threaded Guide Pin Ø 2.5 mm, 230 mm length, 10 mm Thread

0302
Drill Guide adjustable on 135°, 140°, 145°, 150°

0304 Measuring Gauge

0306 Triple Reamer complete

0308 Tap

0310 Guide Sleeve, short, for Tapping

0312 Guide Sleeve, long, for Screwing in Lag Screws

0314 Guide Shaft for Insertion of Coupling Screws

0316 Coupling Screw for Femoral Dynamic Hip Screw

0317 Guide Shaft

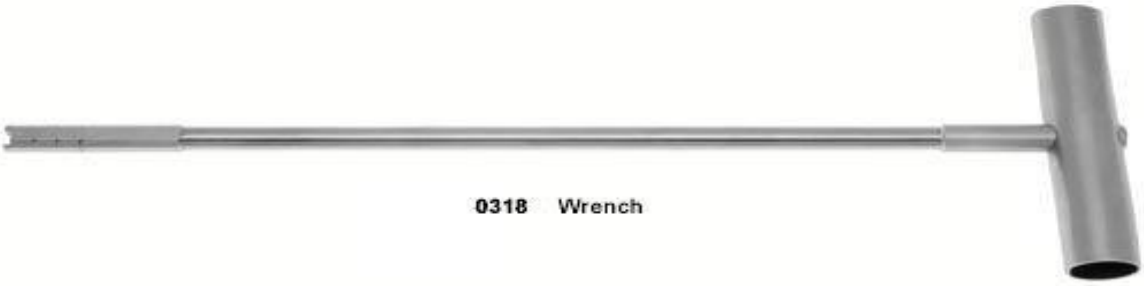

0318 Wrench

0320 Impactor

0322 Handle

SAFEMED INSDUSTRY

0313 New Guide Sleeve

0315 New Wrench
requires Coupling Screw 0328

0328 New Coupling Screw

0319 New Impactor

SAFEMED INSDUSTRY

0332
Drill Guide, adjustable
to 135°/140°/145°/150°
for three Guide Wires

SAFEMED INSDUSTRY

Hip Screw Plates with self Compression Holes

Holes	2	4	5	6	8
135°	0350	0352	0354	42-02-0356	0358
140°		0368	0370	42-02-0372	
145°		0374	0376	42-02-0378	
150°	0380	0382	0384	42-02-0386	0388
Holes	**10**	**12**	**14**	**16**	
135°	0360	0362	0364	0366	
150°	0390	0392			

Dynamic Lag Screws, Thread length 22 mm

Length	50 mm 0400	55 mm 0402	60 mm 0404	65 mm 0406	70 mm 0408	75 mm 0410	80 mm 0412
Length	85 mm 0414	90 mm 0416	95 mm 0418	100 mm 0420	105 mm 0422	110 mm 0424	115 mm 0426
Length	120 mm 0428	125 mm 0430	130 mm 0432	135 mm 0434	140 mm 0436	145 mm 0438	

0440 Compression Screw

SAFEMED INSDUSTRY

Dynamic Condylar Plates

Plates - 95°; Barrel Length 25 mm

	Holes	Length
0450	6	100 mm
0452	8	130 mm
0454	10	163 mm
0456	12	198 mm
0458	14	225 mm
0460	16	260 mm
0462	18	306 mm
0464	20	338 mm
0466	22	370 mm

Dynamic Condylar Screws

	Length
0400	50 mm
0402	55 mm
0404	60 mm
0406	65 mm
0408	70 mm
0410	75 mm
0412	80 mm
0414	85 mm

0486 Drill Guide

0488 Triple Reamer complete

SAFEMED INSDUSTRY

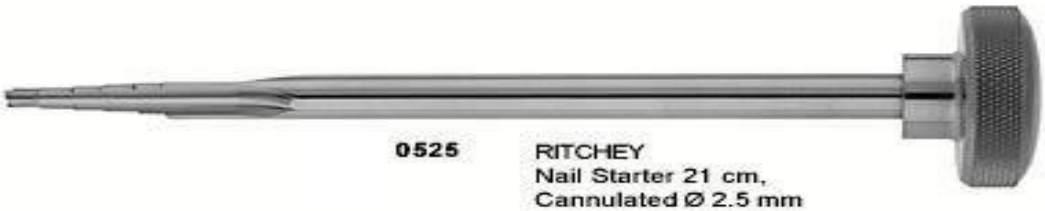

0525 RITCHEY
Nail Starter 21 cm,
Cannulated Ø 2.5 mm

0526 Nail Starter

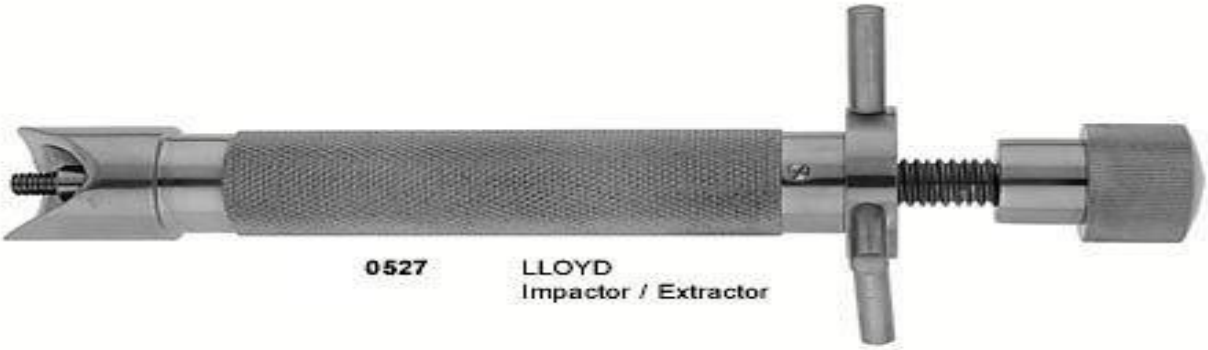

0527 LLOYD
Impactor / Extractor

0528 Impactor / Extractor

0529 Nail Driver

SAFEMED INSDUSTRY

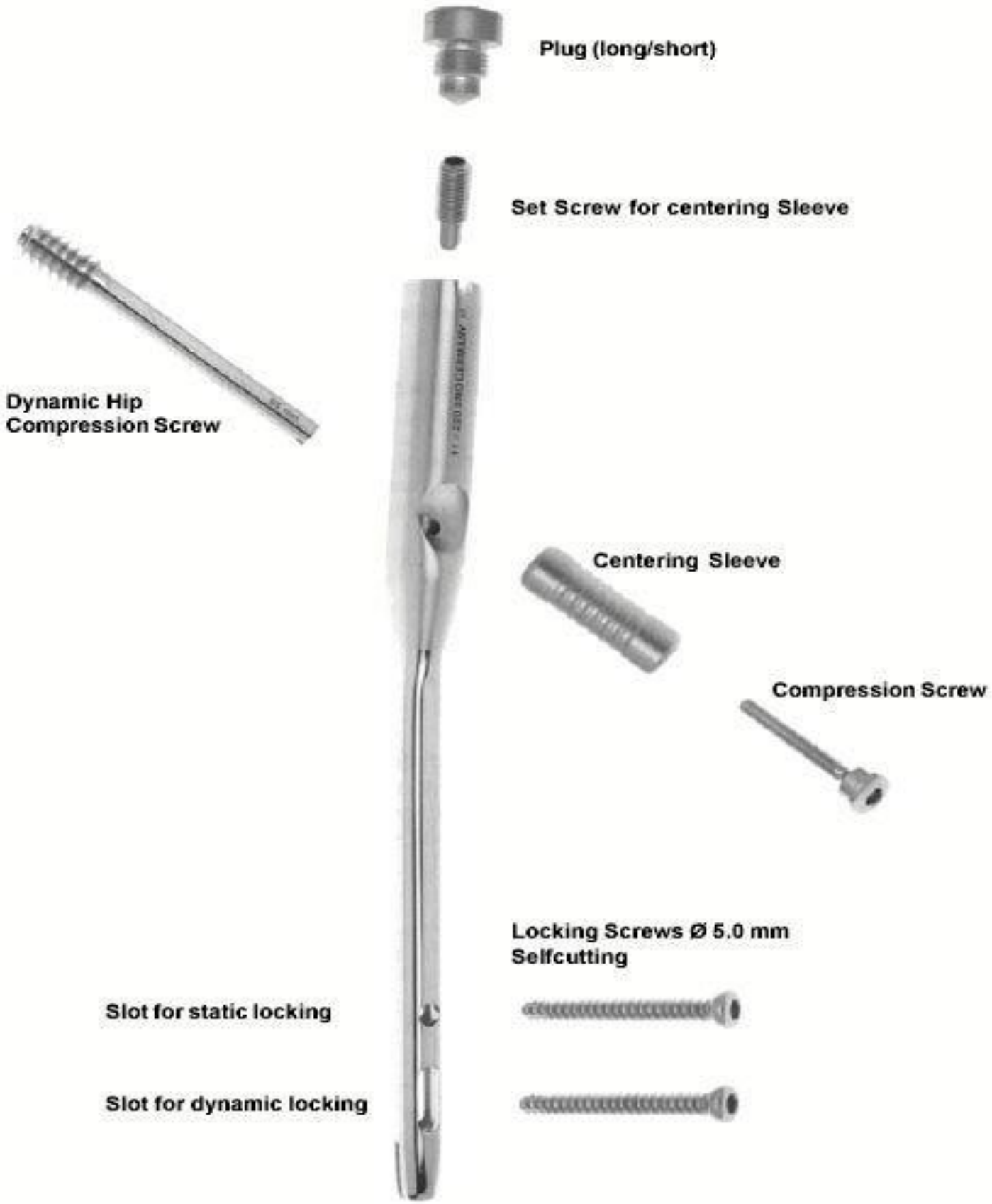

SAFEMED INSDUSTRY

Cat-N°	Ø mm	Length mm	Angle	right/left	Name
0820	10	220	125°		E.T.S.
0822	10	220	130°		E.T.S.
0824	10	220	135°		E.T.S.
0830	11	220	125°		E.T.S.
0832	11	220	130°		E.T.S.
0834	11	220	135°		E.T.S.
0840	12	220	125°		E.T.S.
0842	12	220	130°		E.T.S.
0844	12	220	135°		E.T.S.
0850	13	220	125°		E.T.S.
0852	13	220	130°		E.T.S.
0854	13	220	135°		E.T.S.
0860	14	220	125°		E.T.S.
0862	14	220	130°		E.T.S.
0864	14	220	135°		E.T.S.
0916	10	340	125°	left	H.T.S.
0918	10	340	125°	right	H.T.S.
0920	10	340	130°	left	H.T.S.
0922	10	340	130°	right	H.T.S.
0924	10	340	135°	left	H.T.S.
0926	10	340	135°	right	H.T.S.
0928	10	360	125°	left	H.T.S.
0930	10	360	125°	right	H.T.S.
0932	10	360	130°	left	H.T.S.
0934	10	360	130°	right	H.T.S.
0936	10	360	135°	left	H.T.S.
0938	10	360	135°	right	H.T.S.
0940	10	380	125°	left	H.T.S.
0942	10	380	125°	right	H.T.S.
0944	10	380	130°	left	H.T.S.
0946	10	380	130°	right	H.T.S.
0948	10	380	135°	left	H.T.S.
0950	10	380	135°	right	H.T.S.
0952	10	400	125°	left	H.T.S.
0954	10	400	125°	right	H.T.S.
0956	10	400	130°	left	H.T.S.
0958	10	400	130°	right	H.T.S.
0960	10	400	135°	left	H.T.S.
0962	10	400	135°	right	H.T.S.
0964	10	420	125°	left	H.T.S.
0966	10	420	125°	right	H.T.S.
0968	10	420	130°	left	H.T.S.
0970	10	420	130°	right	H.T.S.
0972	10	420	135°	left	H.T.S.
0974	10	420	135°	right	H.T.S.

SAFEMED INSDUSTRY

1220
E.T.S. - Head Bolt long

1222
E.T.S. - Head Bolt short

1224
E.T.S. - Set Screw

1226
E.T.S. - Centering Sleeve

Cat-N°	Length mm
0408	70
0410	75
0412	80
0414	85
0416	90
0418	95
0420	100
0422	105
0424	110
0426	115
0428	120
0430	125
0432	130

Dynamic Compression Screw
Thread Length 22 mm

0440
Compression Screw

Cat-N°	Length mm
1782	30
1783	35
1784	40
1785	45
1786	50
1787	55
1788	60

E.T.S. - Locking Screw Ø 5.0 mm
for disatl Holes

SAFEMED INSDUSTRY

1238 E.T.S. Drill Sleeve Ø 2.5 mm silver

1240 E.T.S. Drill Sleeve Ø 7.5 mm black

1242 E.T.S. Drill Sleeve Ø 8.0 mm green

1243 E.T.S. Drill Sleeve Ø 9.4 mm gold

1244 E.T.S. Drill Sleeve Ø 13.0 mm blue

1910 Drill Sleeve Ø 8.0 green, long for distal

1914 Drill Sleeve Ø 4.0 gold, for distal

SAFEMED INSDUSTRY

1254 E.T.S. - Coupling Screw for insertion of Dynamic Hip Screw

1256 E.T.S. - Guide Shaft for Coupling

1258 E.T.S. - Wrench for Insertion of Dynamic Hip Screw

0316 E.T.S. - Coupling Hip Screw for Femoral Dynamic Hip Screw

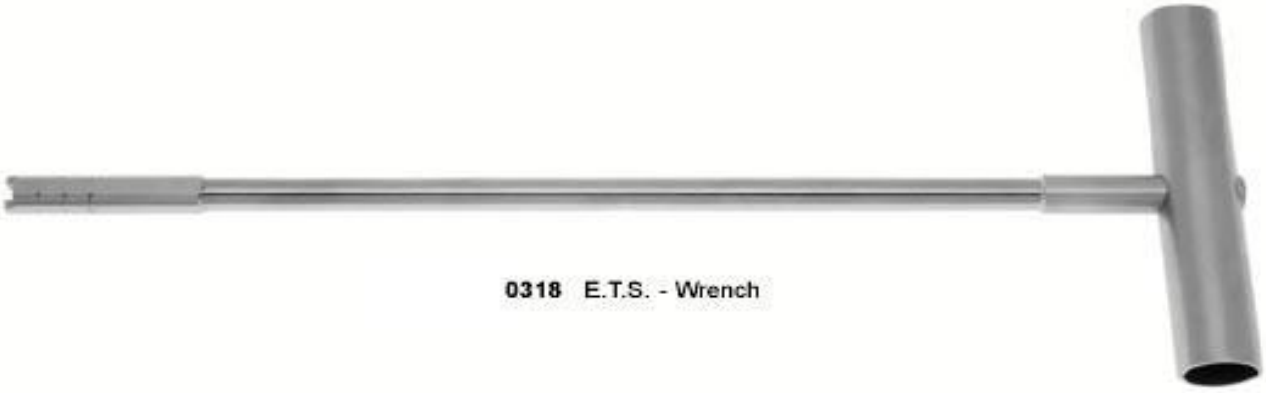

0318 E.T.S. - Wrench

SAFEMED INSDUSTRY

1260 E.T.S. - Guide Pin, Ø 2.5 mm, length 330 mm

1262 E.T.S. - Sleeve Impactor for Centering Sleeve Insertion

1272 E.T.S. - Targeting Device for External Guide Ø 2.5 mm

1264 E.T.S. - Nail Extractor Bolt

1266 E.T.S. - Screw Length Gauge

1270 E.T.S. - Tapered Reamer Cannulated

1850 Universal Socket Wrench

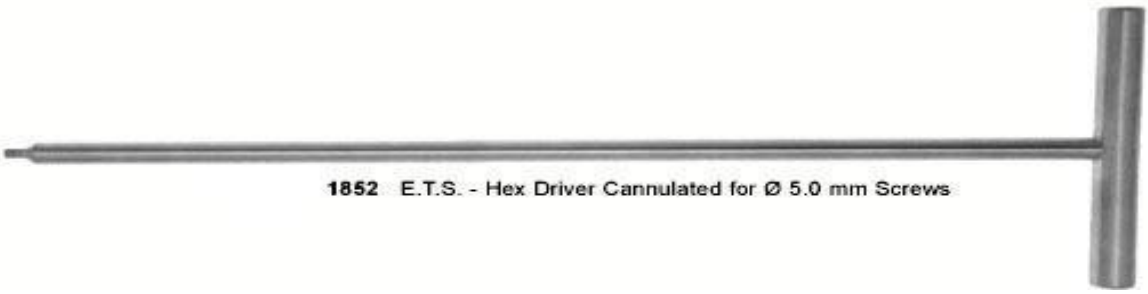

1852 E.T.S. - Hex Driver Cannulated for Ø 5.0 mm Screws

SAFEMED INSDUSTRY

1898 E.T.S. - Driver / Extractor Tube

1900 E.T.S. - Skin Protektor

1894 E.T.S. - Reamer Guide Rod Holder (Jacobs Chuck)

0322 E.T.S. - Holder

SAFEMED INSDUSTRY

Intramedullary Hip Screw System

Hip Screws and Gamma Nails

Stainles Steel (ASTM F 138)

Cat.-N°	Ø mm	Length mm	Angle	left / right
1310	12	220	125°	
1312	12	220	130°	
1314	12	220	135°	
1316	11	340	125°	left
1318	11	340	125°	right
1320	11	340	130°	left
1322	11	340	130°	right
1324	11	340	135°	left
1326	11	340	135°	right
1328	11	360	125°	left
1330	11	360	125°	right
1332	11	360	130°	left
1334	11	360	130°	right
1336	11	360	135°	left
1338	11	360	135°	right
1340	11	380	125°	left
1342	11	380	125°	right
1344	11	380	130°	left
1346	11	380	130°	right
1348	11	380	135°	left
1350	11	380	135°	right
1352	11	400	125°	left
1354	11	400	125°	right
1356	11	400	130°	left
1358	11	400	130°	right
1360	11	400	135°	left
1362	11	400	135°	right

SAFEMED INSDUSTRY

Femoral Screws Ø 6 mm
selftapping

Cat-N°	Length mm
1400	30
1402	35
1404	40
1406	45
1408	50
1410	55
1412	60

1430
Set Screw 8 x 27 mm

1432
Head Bolt (short)

GAMMA Lag Screws
Ø 12 mm

Cat-N°	Length mm
1434	80
1435	85
1436	90
1437	95
1438	100
1439	105
1440	110
1441	115
1442	120

SAFEMED INSDUSTRY

Cannulated Screws

Ø 7.0 mm width over flats 5 mm,
16 mm length of thread, drill bit Ø 5.0 mmm

	length		length
0001	25 mm	0011	75 mm
0002	30 mm	0012	80 mm
0003	35 mm	0013	85 mm
0004	40 mm	0014	90 mm
0005	45 mm	0015	95 mm
0006	50 mm	0016	100 mm
0007	55 mm	0017	105 mm
0008	60 mm	0018	110 mm
0009	65 mm	0019	115 mm
0010	70 mm	0020	120 mm

Ø 7.0 mm width over flats 5 mm,
32 mm length of thread, drill bit Ø 5.0 mmm

	length		length
0030	40mm	0039	85 mm
0031	45mm	0040	90 mm
0032	50mm	0041	95 mm
0033	55mm	0042	100 mm
0034	60mm	0043	105 mm
0035	65mm	0044	110 mm
0036	70mm	0045	115 mm
0037	75mm	0046	120 mm
0038	80mm		

0140 Guide Wire with 10 mm thread, Ø 2.0 mm,
for hollow screws Ø 7 mm, 230 mm long

SAFEMED INSDUSTRY

Instruments for 7 mm Cannulated Screws

0100 Drill Bit Ø 5.0 mm

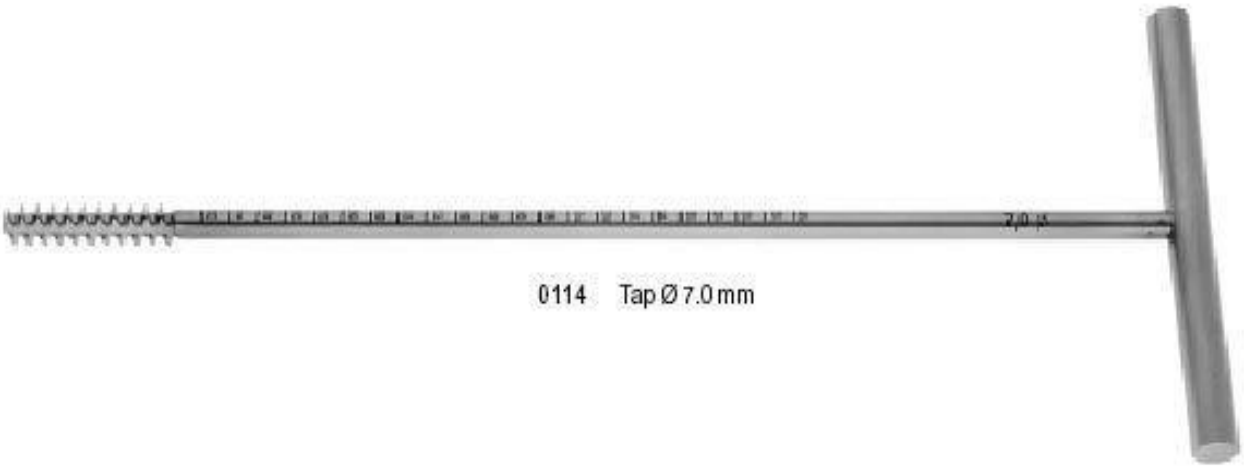

0114 Tap Ø 7.0 mm

0118 Screwdriver for 7 mm screws

SAFEMED INSDUSTRY

Instruments for 7 mm Cannulated Screws

0130
Tissue Protector Sleeve

0131
Parallel Target Device for
Guide Wires Ø 2.0 mm

Washer for Hollow Screws

0132	Ø 19 mm
0522	Ø 13 mm

SAFEMED INSDUSTRY

Cannulated Screws Ø 3.5 mm

Ø of thread	3.5 mm	3.5 mm
Width over flats	2.5 mm	2.5 mm
Drill Bit	2.7 mm	2.7 mm
length		
10 mm	0300	0342
12 mm	0302	0344
14 mm	0304	0346
16 mm	0306	0348
18 mm	0308	0350
20 mm	0310	0352
22 mm	0312	0354
24 mm	0314	0356
26 mm	0316	0358
28 mm	0318	0360
30 mm	0320	0362
32 mm	0322	0364
34 mm	0324	0366
36 mm	0326	0368
38 mm	0328	0370
40 mm	0330	0372
42 mm	0332	0374
44 mm	0334	0376
46 mm	0336	0378
48 mm	0338	0380
50 mm	0340	0382

0138 Guide Wire with 10 mm thread, Ø 1.0 mm, for Hollow Screws Ø 3.5 mm, 230 mm long

SAFEMED INSDUSTRY

Instruments for 3.5 mm Cannulated Screws

0334 Tap Sleeve 3.5 mm
Drill Sleeve 2.5 mm

0122 Screwdriver for 3.5 mm
Cannulated Screws

0124 Tap for 3.5 mm
Cannulated Screws

Cannulated Drill Bit 160 mm length
0098 Drill Bit Ø 3.5 mm / 1.35
0099 Drill Bit Ø 2.7 mm / 1.35

0126 Tap Sleeve 2.7 mm
Drill Sleeve 1.0 mm

SAFEMED INSDUSTRY

Cannulated Screws Ø 4.5 mm

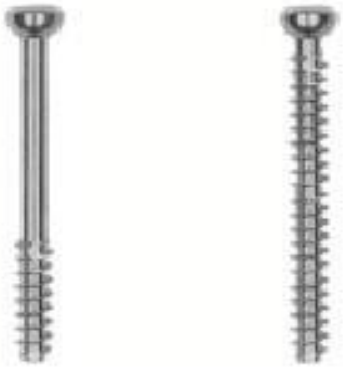

Ø of thread	4.5 mm	4.5 mm
Width over flats	3.5 mm	3.5 mm
Drill Bit	3.2 mm	3.2 mm
length		
20 mm	0200	0230
22 mm	0201	0231
24 mm	0202	0232
26 mm	0203	0233
28 mm	0204	0234
30 mm	0205	0235
32 mm	0206	0236
34 mm	0207	0237
36 mm	0208	0238
38 mm	0209	0239
40 mm	0210	0240
42 mm	0211	0241
44 mm	0212	0242
46 mm	0213	0243
48 mm	0214	0244
50 mm	0215	0245
52 mm	0216	0246
54 mm	0217	0247
56 mm	0218	0248
58 mm	0219	0249
60 mm	0220	0250

0260 Guide Wire with 10 mm thread, Ø 1.6 mm,
for Hollow Screws Ø 4.5 mm, 230 mm long

SAFEMED INSDUSTRY

Instruments for 4.5 mm Cannulated Screws

0334 Tap Sleeve 3.5 mm
Drill Sleeve 2.5 mm

0120 Screwdriver for 4.5 mm
Cannulated Screws

0112 Tap for 4.5 mm
Cannulated Screws

Cannulated Drill Bit 160 mm length
0142 Drill Bit Ø 4.5 mm / 1.75
0144 Drill Bit Ø 3.2 mm / 1.75

0330 Tap Sleeve 4.5 mm
Drill Sleeve 3.2 mm

SAFEMED INSDUSTRY

Instruments for cannulated Screws

0160 Direct Screws Length Gauge for Ø 7.0 mm

0162 Canal Brush Ø 2.1 mm

0164 Canal Cleaner Ø 2.0 mm

0166 Direct Screws Length Gauge for Ø 4.5 mm

0168 Canal Brush Ø 1.75 mm

0170 Canal Cleaner Ø 1.6 mm

0172 Direct Screws Length Gauge for Ø 3.5 mm

0174 Canal Brush Ø 1.35 mm

0176 Canal Cleaner Ø 1.2 mm

0178 Holding Clamp

SAFEMED INSDUSTRY

Epiphyseal Staples

Stainless Steel

0610
24 x 33 x 4.8 mm

0612
24 x 33 x 9.5 mm

0614
24 x 33 x 14 mm

	Diameter	Width	Length
0620	2.5 mm (3/32")	22 mm (7/8")	19 mm (3/4")
0622	2.5 mm (3/32")	16 mm (5/8")	19 mm (3/4")
0624	1.5 mm (1/16")	22 mm (7/8")	19 mm (3/4")
0626	1.5 mm (1/16")	16 mm (5/8")	19 mm (3/4")

0630 Staple Extractor

0632 Staple Driver

0634 Staple Inserter

SAFEMED INSDUSTRY

Chrome Cobalt Molybden Osteotomy Staples

Cat.-N°	Width	Length
0705	16 mm	22 mm
0706	22 mm	22 mm
0707	28 mm	22 mm

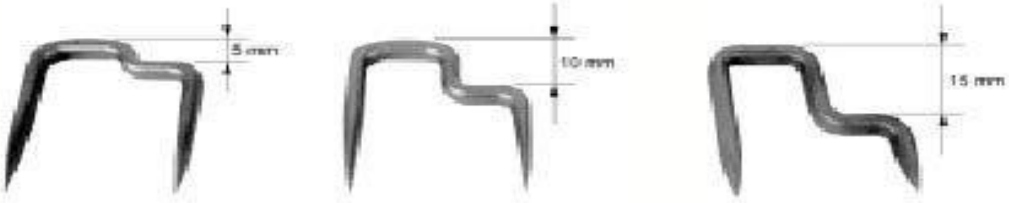

Cat.-N°	Width A	Length B	Heigth C
0710	24 mm	30 mm	5 mm
0712	24 mm	30 mm	10 mm
0714	24 mm	30 mm	15 mm

Cat.-N°	Width	Length	Heigth
0730	24 mm	35 mm	5 mm
0732	24 mm	40 mm	10 mm
0734	24 mm	40 mm	15 mm

SAFEMED INSDUSTRY

Wilberg
0750

Wilberg
0752

Wilberg
0754

Palmer
0766

Palmer
0768

Palmer

Cat.-N°	Length	Ø
42-05-0770	15 mm	1.5 mm
42-05-0772	20 mm	1.5 mm
42-05-0774	25 mm	1.5 mm
42-05-0776	30 mm	1.5 mm
42-05-0778	35 mm	1.5 mm
42-05-0780	40 mm	1.5 mm
42-05-0782	45 mm	1.5 mm
42-05-0784	50 mm	1.5 mm
42-05-0786	55 mm	1.5 mm
42-05-0788	60 mm	1.5 mm
42-05-0790	65 mm	1.5 mm
42-05-0792	70 mm	1.5 mm

SAFEMED INSDUSTRY

Bone Screws

Mini Screws

Ø of thread	1.5 mm	2.0 mm	2.7 mm
Ø of core	1.0 mm	1.3 mm	1.9 mm
Ø of head	3.0 mm	4.0 mm	5.0 mm
length			
6 mm	0400	0430	0460
7 mm	0402		
8 mm	0404	0432	0462
9 mm	0406		
10 mm	0408	0434	0464
11 mm	0410		
12 mm	0412	0436	0466
14 mm	0414	0438	0468
16 mm	0416	0440	0470
18 mm	0418	0442	0472
20 mm	0420	0444	0474
22 mm		0446	0476
24 mm		0448	0478
26 mm			0480
28 mm			0482
30 mm			0484
32 mm			0486
34 mm			0488
36 mm			0490
38 mm			0492
40 mm			0494

SAFEMED INSDUSTRY

TITANIUM Implants DIN ISO 5832-3 ASTM F620-96

TITANIUM Bone Screws

Mini Screws

Ø of thread	1.5 mm	2.0 mm	2.7 mm
Ø of core	1.0 mm	1.3 mm	1.9 mm
Ø of head	3.0 mm	4.0 mm	5.0 mm
length			
6 mm	0400TI	0430TI	0460TI
7 mm	0402TI		
8 mm	0404TI	0432TI	0462TI
9 mm	0406TI		
10 mm	0408TI	0434TI	0464TI
11 mm	0410TI		
12 mm	0412TI	0436TI	0466TI
14 mm	0414TI	0438TI	0468TI
16 mm	0416TI	0440TI	0470TI
18 mm	0418TI	0442TI	0472TI
20 mm	0420TI	0444TI	0474TI
22 mm		0446TI	0476TI
24 mm		0448TI	0478TI
26 mm			0480TI
28 mm			0482TI
30 mm			0484TI
32 mm			0486TI
34 mm			0488TI
36 mm			0490TI
38 mm			0492TI
40 mm			0494TI

SAFEMED INSDUSTRY

Mini Plates

Plates for Ø 2.7 mm Screws

Profile: 8.0 x 2.0 mm
Distance between holes: 8.0 mm

	Length	holes
0520	20 mm	2
0522	36 mm	4
0524	44 mm	5
0526	52 mm	6

Profile: 8.0 x 2.5 mm
Distance between holes: 8.0 mm

	Length	holes
0528	60 mm	7
0530	68 mm	8
0532	76 mm	9
0534	84 mm	10
0536	100 mm	12

Finger Plates
Quarter tubular Plates

	Length	holes
0540	25 mm	3
0542	33 mm	4
0544	41 mm	5
0546	49 mm	6
0548	57 mm	7
0550	65 mm	8

0552 oblique left
0554 oblique right

0556 straight

0558 angled left 90°
0560 angled right 90°

0562

SAFEMED INSDUSTRY

TITANIUM Implants DIN ISO 5832-3 ASTM F620-96

TITANIUM Mini Plates

Plates for Ø 2.7 mm Screws

Profile: 8.0 x 2.0 mm
Distance between holes: 8.0 mm

	Length	holes
0520TI	20 mm	2
0522TI	36 mm	4
0524TI	44 mm	5
0526TI	52 mm	6

Finger Plates
Quarter tubular Plates

	Length	holes
0540TI	25 mm	3
0542TI	33 mm	4
0544TI	41 mm	5
0546TI	49 mm	6
0548TI	57 mm	7
0550TI	65 mm	8

Profile: 8.0 x 2.5 mm
Distance between holes: 8.0 mm

	Length	holes
0528TI	60 mm	7
0530TI	68 mm	8
0532TI	76 mm	9
0534TI	84 mm	10
0536TI	100 mm	12

0552TI oblique left

0554TI oblique right

0556TI straight

0558TI angled left 90°

0560TI angled right 90°

0562TI

SAFEMED INSDUSTRY

Mini Plates

Plates for Ø 2.7 mm Screws

	Length	holes
0570	22 mm	4
0572	27 mm	5
0574	32 mm	6
0576	37 mm	7
0578	42 mm	8

Profile:
Thick 4-6 holes 1.0 mm
Thick 7-8 holes 1.5 mm
Broad 5.0 mm
Distance 5.0 mm

Mini T-Plates for 2.0 mm screws
Primary indication: Fractures of the phalanges

Profile: 5.0 x 1.2 mm
Distance between holes: 5.0 mm

	Length	Number of holes in head	in shaft
0580	50 mm	3	9
0582	50 mm	4	9

0584 Straight Mini Plates for Ø 2.0 mm screws
with 20 holes, 100 mm length

0586 Mini-Adaption-Plate for Ø 2.0 mm screws
with 20 holes, 100 mm length

Straight Mini-Plates

	Length	holes
0590	17 mm	3
0592	23 mm	4
0594	29 mm	5
0596	35 mm	6

Profile:
Thick 1.2 mm
Broad: 5.0 mm
Distance: 6.0 mm

0600
oblique left

0602
oblique right

0604
straight

0606
angled left
90°

0608
angled right
90°

SAFEMED INSDUSTRY

TITANIUM Implants DIN ISO 5832-3 ASTM F620-96

TITANIUM Mini Plates

Plates for Ø 2.7 mm Screws

	Length	holes
0570TI	22 mm	4
0572TI	27 mm	5
0574TI	32 mm	6
0576TI	37 mm	7
0578TI	42 mm	8

Profile:
Thick 4-6 holes 1.0 mm
Thick 7-8 holes 1.5 mm
Broad 5.0 mm
Distance 5.0 mm

Mini T-Plates for 2.0 mm screws
Primary indication: Fractures of the phalanges

Profile: 5.0 x 1.2 mm
Distance between holes: 5.0 mm

	Length	Number of holes in head	in shaft
0580TI	50 mm	3	9
0582TI	50 mm	4	9

0584TI Straight Mini Plates for Ø 2.0 mm screws with 20 holes, 100 mm length

0586TI Mini-Adaption-Plate for Ø 2.0 mm screws with 20 holes, 100 mm length

Straight Mini-Plates

	Length	holes
0590TI	17 mm	3
0592TI	23 mm	4
0594TI	29 mm	5
0596TI	35 mm	6

Profile:
Thick 1.2 mm
Broad: 5.0 mm
Distance: 6.0 mm

0600TI
oblique left

0602TI
oblique right

0604TI
straight

0606TI
angled left 90°

0608TI
angled right 90°

SAFEMED INSDUSTRY

Mini Fragment Combined Instrument- and Implant Set

Instruments for Ø 1.5 and Ø 2.0 mm Screws

0071 Tap Ø 1.5 mm
0072 Tap Ø 2.0 mm
0073 Tap Ø 2.7 mm

Drill Bits with end
to fit quick coupling
1211 Ø 1.1 mm
1215 Ø 1.5 mm
1220 Ø 2.0 mm
1227 Ø 2.7 mm

0100 Mini Countersink

0110 Depth Gauge for Ø 1.5 mm
and Ø 2.0 mm Screws

0250 Mini Drill Sleeve for Ø 1.1 mm
and Ø 2.0 mm Drill Bits

0102 Small Countersink with
end to fit quick coupling

SAFEMED INSDUSTRY

0096 Tap Handle with
Dental Coupling

0094 Tap Handle with
Quick Coupling

Small Hexagonal Screwdriver
0170 1.5 mm with holding sleeve
0172 2.5 mm with holding sleeve

0385 Periosteal Elevator

0112 Depth Gauge for
Ø 2.7 mm - Ø 4.0 mm screws

0256 Tap Sleeve, Ø 3.5 mm

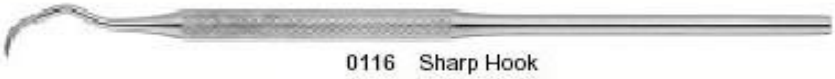

0116 Sharp Hook

SAFEMED INSDUSTRY

0252Drill Guide and
Drill Sleeve for
Ø 2.0 mm drill bit

0400 Bending Iron

0654 Hohmann Retractor
with broad shank

1309 Holding Forceps

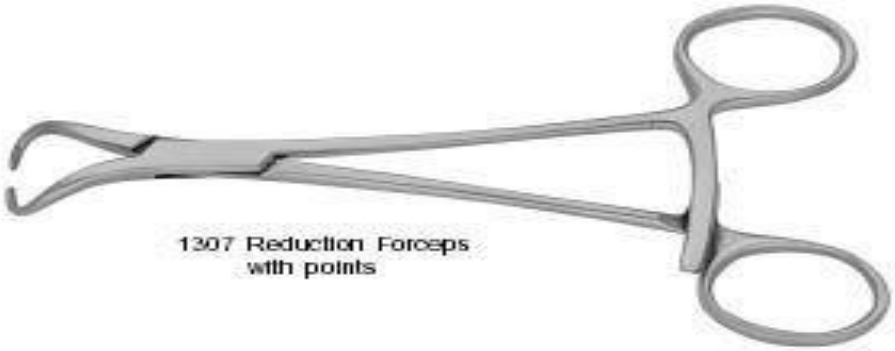

1307 Reduction Forceps
with points

0105 Hohmann Retractor 6 mm
0106 Hohmann Retractor 8 mm

SAFEMED INSDUSTRY

Bone Screws

Small Screws with Spherical Head and small hexagonal Socket width across flats 2.5 mm

Ø of thread	3.5 mm	3.5 mm	4.0 mm	4.0 mm
Ø of core	2.4 mm	1.9 mm	1.9 mm	1.9 mm
Pitch	1.25 mm	1.75 mm	1.75 mm	1.75 mm
Ø of head	6.0 mm	6.0 mm	6.0 mm	6.0 mm
Ø of shaft			2.3 mm	
length				
10 mm	0002	0050	0100	0140
12 mm	0004	0052	0102	0142
14 mm	0006	0054	0104	0144
16 mm	0008	0056	0106	0146
18 mm	0010	0058	0108	0148
20 mm	0012	0060	0110	0150
22 mm	0014	0062	0112	0152
24 mm	0016	0064	0114	0154
26 mm	0018	0066	0116	0156
28 mm	0020	0068	0118	0158
30 mm	0022	0070	0120	0160
32 mm	0024	0072	0121	0162
34 mm	0025	0073		
35 mm			0122	0164
36 mm	0026	0074		
38 mm	0027	0075		
40 mm	0028	0076	0124	0166
42 mm	0029			
45 mm	0030	0078	0126	0168
48 mm	0031			
50 mm	0032	0080	0128	0170
55 mm	0034	0082	0129	0172
60 mm	0036	0084	0130	0174
65 mm	0038			
70 mm	0040			
75 mm	0042			
80 mm	0044			

0176 Washer for Navicular Spongiosa Screws Ø 7.0 mm

SAFEMED INSDUSTRY

SAFEMED INSDUSTRY

TITANIUM Implants DIN ISO 5832-3 ASTM F620-96

TITANIUM Bone Screws

Small Screws with Spherical Head and small hexagonal Socket width across flats 2.5 mm

Ø of thread	3.5 mm	3.5 mm	4.0 mm	4.0 mm
Ø of core	2.4 mm	1.9 mm	1.9 mm	1.9 mm
Pitch	1.25 mm	1.75 mm	1.75 mm	1.75 mm
Ø of head	6.0 mm	6.0 mm	6.0 mm	6.0 mm
Ø of shaft			2.3 mm	
length				
10mm	0002TI	0050TI	0100TI	0140TI
12mm	0004TI	0052TI	0102TI	0142TI
14mm	0006TI	0054TI	0104TI	0144TI
16mm	0008TI	0056TI	0106TI	0146TI
18mm	0010TI	0058TI	0108TI	0148TI
20mm	0012TI	0060TI	0110TI	0150TI
22mm	0014TI	0062TI	0112TI	0152TI
24mm	0016TI	0064TI	0114TI	0154TI
26mm	0018TI	0066TI	0116TI	0156TI
28mm	0020TI	0068TI	0118TI	0158TI
30mm	0022TI	0070TI	0120TI	0160TI
32mm	0024TI	0072TI	0121TI	0162TI
34mm	0025TI	0073TI		
35mm			0122TI	0164TI
36mm	0026TI	0074TI		
38mm	0027TI	0075TI		
40mm	0028TI	0076TI	0124TI	0166TI
42mm	0029TI			
45mm	0030TI	0078TI	0126TI	0168TI
48mm	0031TI			
50mm	0032TI	0080TI	0128TI	0170TI
55mm	0034TI	0082TI	0129TI	0172TI
60mm	0036TI	0084TI	0130TI	0174TI
65mm	0038TI			
70mm	0040TI			
75mm	0042TI			
80mm	0044TI			

42-04-0176 Washer for Navicular Spongiosa Screws Ø 7.0 mm

SAFEMED INSDUSTRY

Bone Screws, Self Tapping

Ø of thread	3.5 mm	4.0 mm	4.0 mm
Ø of core	2.4 mm	1.9 mm	1.9 mm
Pitch	1.25 mm	1.75 mm	1.75 mm
Ø of head	6.0 mm	6.0 mm	6.0 mm
Ø of shaft		2.3 mm	
length			
10 mm	1002	1100	1140
12 mm	1004	1102	1142
14 mm	1006	1104	1144
16 mm	1008	1106	1146
18 mm	1010	1108	1148
20 mm	1012	1110	1150
22 mm	1014	1112	1152
24 mm	1016	1114	1154
26 mm	1018	1116	1156
28 mm	1020	1118	1158
30 mm	1022	1120	1160
32 mm	1024	1121	1162
34 mm	1025		
35 mm		1122	1164
36 mm	1026		
38 mm	1027		
40 mm	1028	1124	1166
42 mm	1029		
45 mm	1030	1126	1168
48 mm	1031		
50 mm	1032	1128	1170
55 mm			1172
60 mm			1174

SAFEMED INSDUSTRY

Small Fragment Plates for Ø 3.5 mm screws, DPL
Profile 10 x 3 mm, Distance between holes 12 and 16 mm

	Length	holes
0200	25 mm	2
0202	37 mm	3
0204	49 mm	4
0206	61 mm	5
0208	73 mm	6
0210	85 mm	7
0212	97 mm	8
0214	109 mm	9
0216	121 mm	10
0218	145 mm	12

One third tubular Plates
Profile 1/3 Tube 12 x 1 mm

	Length	holes
0220	25 mm	2
0222	37 mm	3
0224	49 mm	4
0226	61 mm	5
0228	73 mm	6
0230	85 mm	7
0232	97 mm	8
0234	109 mm	9
0236	121 mm	10
0238	145 mm	12

Small T-Plates right angle
3 holes in head

	Length	holes
0240	45 mm	3
0242	67 mm	5

Small T-Plates right angle
4 holes in head

	Length	holes
0244	56 mm	4
0246	78 mm	6

	Length	holes
0250	52 mm	3
0251	63 mm	4
0252	67 mm	5

Small T-Plates Oblique angle
3 holes in head

Cloverleaf Plates
3 holes in head

0256 Shaft with 3 holes, 88 mm long
0258 Shaft with 4 holes, 104 mm long

SAFEMED INSDUSTRY

TITANIUM Implants DIN ISO 5832-3 ASTM F620-96

Small Fragment Plates for Ø 3.5 mm screws, DPL
Profile 10 x 3 mm, Distance between holes 12 and 16 mm

	Length	holes
0200TI	25mm	2
0202TI	37mm	3
0204TI	49mm	4
0206TI	61mm	5
0208TI	73mm	6
0210TI	85mm	7
0212TI	97mm	8
0214TI	109mm	9
0216TI	121mm	10
0218TI	145mm	12

One third tubular Plates
Profile 1/3 Tube 12 x 1 mm

	Length	holes
0220TI	25mm	2
0222TI	37mm	3
0224TI	49mm	4
0226TI	61mm	5
0228TI	73mm	6
0230TI	85mm	7
0232TI	97mm	8
0234TI	109mm	9
0236TI	121mm	10
0238TI	145mm	12

Small T-Plates right angle
3 holes in head

	Length	holes
0240TI	45mm	3
0242TI	67mm	5

Small T-Plates right angle
4 holes in head

	Length	holes
0244TI	56mm	4
0246TI	78mm	6

	Length	holes
0250TI	52mm	3
0251TI	63mm	4
0252TI	67mm	5

Small T-Plates Oblique angle
3 holes in head

Cloverleaf Plates
3 holes in head
0256TI Shaft with 3 holes, 88 mm long
0258TI Shaft with 4 holes, 104 mm long

SAFEMED INSDUSTRY

Small Plates

Straight Narrow Reconstruction Plates, 2.7 mm

	Length	holes
0260	48 mm	6
0261	64 mm	8
0262	80 mm	10
0263	96 mm	12
0264	112 mm	14
0265	128 mm	16
0266	144 mm	18
0267	160 mm	20
0268	176 mm	22
0269	192 mm	24

Profile: 8.0 x 2.7 mm
Distance between holes: 8.0 mm

Reconstruction Plates, 3.5 mm

	Length	holes
0270	58 mm	5
0271	70 mm	6
0272	82 mm	7
0273	94 mm	8
0274	106 mm	9
0275	118 mm	10
0276	130 mm	11
0277	142 mm	12
0278	154 mm	13
0279	166 mm	14
0280	178 mm	15
0281	190 mm	16
0282	214 mm	18
0283	238 mm	20
0284	262 mm	22

Profile: 10.0 x 2.8 mm
Distance between holes: 12.0 mm

0286 Y-Plate
Profile: 10.0 x 2 mm
Distance between holes: 12mm

0288
Calcanious Bone Plate, large

0290
Calcanious Bone Plate, small

SAFEMED INSDUSTRY

TITANIUM Implants DIN ISO 5832-3 ASTM F620-96

Small TITANIUM Plates

Straight Narrow Reconstruction Plates, 2.7 mm

	Length	holes
0260TI	48 mm	6
0261TI	64 mm	8
0262TI	80 mm	10
0263TI	96 mm	12
0264TI	112 mm	14
0265TI	128 mm	16
0266TI	144 mm	18
0267TI	160 mm	20
0268TI	176 mm	22
0269TI	192 mm	24

Profile: 8.0 x 2.7 mm
Distance between holes: 8.0 mm

Reconstruction Plates, 3.5 mm

	Length	holes
0270TI	58 mm	5
0271TI	70 mm	6
0272TI	82 mm	7
0273TI	94 mm	8
0274TI	106 mm	9
0275TI	118 mm	10
0276TI	130 mm	11
0277TI	142 mm	12
0278TI	154 mm	13
0279TI	166 mm	14
0280TI	178 mm	15
0281TI	190 mm	16
0282TI	214 mm	18
0283TI	238 mm	20
0284TI	262 mm	22

Profile: 10.0 x 2.8 mm
Distance between holes: 12.0 mm

0286TI Y-Plate
Profile: 10.0 x 2 mm
Distance between holes: 12 mm

0288TI
Calcanious Bone Plate, large

0290TI
Calcanious Bone Plate, small

Small Fragment Instruments

Taps
0074 Ø 3.5 mm / 1.25 mm pitch, Cortex
0075 Ø 3.5 mm / 1.75 mm pitch, Cancellous

0094 Tap Handle with quick coupling

0252 Drill Guide and Drill Sleeve
for Ø 2.0 mm Drill Bit

0254 Tap Sleeve, Ø 3.5 mm
Drill Sleeve Ø 2.5 mm

0270 Neutral and Load Drill Guide, Ø 3.5 mm,
for 3.5 mm Cortex Screw with fine Thread
used with Ø 2.5 mm Drill Bit

SAFEMED INSDUSTRY

Small Fragment Instruments

Drill Bits with end to
fit quick coupling
1225 Ø 2.5 mm
1235 Ø 3.5 mm

0102 Small Countersink

0172 Small Hexagonal Screwdriver
with Holding Sleeve

0174 Small Hexagonal
Screwdriver
with end to fit quick coupling

0278 Insert Drill Sleeve Ø 3.5 / 2.5 mm

SAFEMED INSDUSTRY

Small Fragment Instruments

0105 Small Hohmann Retractor 6 mm
0106 Small Hohmann Retractor 8 mm

0580 Self-Centering
Bone Holding Forceps

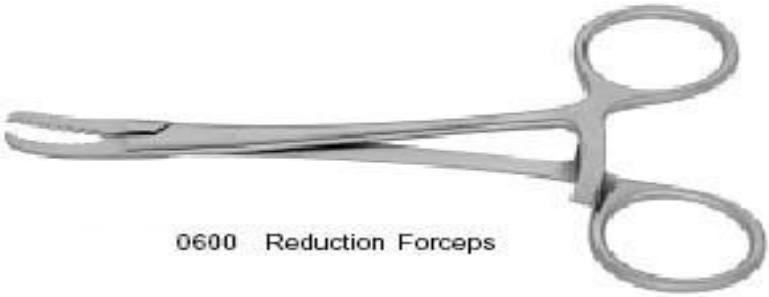

0600 Reduction Forceps

0410 Bending Pliers
for 2.7 and 3.5 mm plates

0654 Hohmann Retractor with broad shank

SAFEMED INSDUSTRY

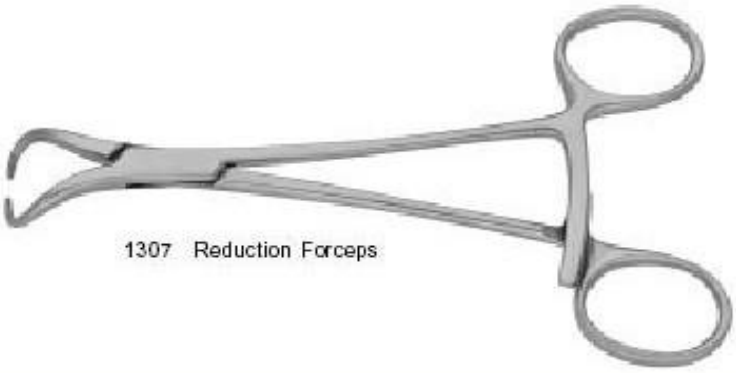

1307 Reduction Forceps

0112 Depth Gauge for Ø 2.7 - 4.0 mm screws

0184 Screw Holding Forceps

0116 Sharp Hook

0075 Bending Template for small plates 7 holes
0076 Bending Template for small plates 9 holes

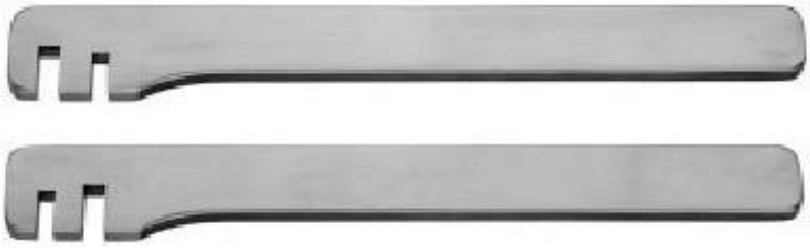

0402
0404 Bending Irons for small plates to be used as pair

SAFEMED INSDUSTRY

Steinmann Pins

	Länge, length, largo, longeur cm						
Ø mm	8	10	12	14	16	18	20
3.5	3420	3421	3422	3423	3424	3425	3426
4.0	3440	3441	3442	3443	3444	3445	3446
4.5	3460	3461	3462	3463	3464	3465	3466
5.0	3480	3481	3482	3483	3484	3485	3486
Ø mm	22	24	26	28	30		
3.5	3427	3428	3429	3430	3431		
4.0	3447	3448	3449	3450	3451		
4.5	3467	3468	3469	3470	3471		
5.0	3487	3488	3489	3490	3491		

Protective Caps for Steinmann Pins
1147 Ø 3.0 mm
1148 Ø 4.0 mm
1149 Ø 5.0 mm

SAFEMED INSDUSTRY

Steinmann Pins with central thread, trocar point and triangular shaft (on request available with other shafts)

Cat.-N°	Ø mm	Length mm
1150	3.00	150
1151	3.00	180
1152	3.00	200
1153	3.00	230
1154	3.50	150
1155	3.50	180
1156	3.50	200
1157	3.50	230
1158	4.00	150
1159	4.00	180
1160	4.00	200
1161	4.00	230
1162	4.00	250
1163	4.50	150
1164	4.50	180
1165	4.50	200
1166	4.50	230
1167	4.50	250
1168	4.50	300
1169	5.00	150
1170	5.00	180
1171	5.00	200
1172	5.00	230
1173	5.00	250
1174	5.00	300

Ø of thread 0.5 mm more than Ø of pin

SAFEMED INSDUSTRY

Schanz Screws (with trocar point and triangular shaft)

Cat.-N°	Ø mm	Length mm	Length of thread mm
1200	3.00	60	20
1202	3.00	80	20
1220	4.00	60	25
1222	4.00	100	25
1224	4.00	130	25
1228	4.00	170	25
1240	4.50	100	50
1242	4.50	120	50
1244	4.50	150	50
1246	4.50	170	50
1248	4.50	200	50
1250	4.50	250	50
1260	5.00	100	50
1264	5.00	125	50
1266	5.00	150	50
1268	5.00	170	50
1270	5.00	200	50
1272	5.00	250	50
1280	6.00	100	35
1284	6.00	150	50
1285	6.00	170	50
1286	6.00	200	50
1287	6.00	250	50

SAFEMED INSDUSTRY

Conical Fixation Pins

Cortical Screws
Shaft: Ø 6.0 mm
Thread: Ø 6/5 mm
Drill: Ø 4.8 mm

	Length of thread mm							
length	30	40	50	60	70	80	90	100
90 mm	1350							
100 mm	1352	1356						
110 mm		1358	1370					
120 mm		1360		1380				
130 mm		1362	1372	1382				
140 mm			1374					
150 mm				1384				
160 mm					1390		1400	
170 mm						1396		
180 mm							1402	1410
200 mm						1398	1404	

Cancellous Screws
Shaft: Ø 6.0 mm
Thread: Ø 6/5 mm
Drill: Ø 4.8 mm

	Length of thread mm			
length	30	40	50	60
90 mm	1450			
100 mm	1452	1456		
110 mm		1458	1464	
120 mm		1460		1470
130 mm		1462	1466	1472
140 mm			1468	
150 mm				1474
160 mm				
170 mm				
180 mm				
200 mm				

SAFEMED INSDUSTRY

Blunt Half Pin, self tapping, with Triangle end

Cat.-N°	Ø mm	length	length of thread mm	Twist Drill
1500	3.0	75 mm	25	25
1502	3.0	110 mm	22	25
1504	4.0	120 mm	45	45
1506	5.0	120 mm	40	40
1508	5.0	150 mm	50	50
1510	5.0	180 mm	50	50
1512	6.0	150 mm	50	50
1514	6.0	180 mm	50	50
1516	6.0	200 mm	60	60

Threaded Steinmann Pins, trocar point and round ends, length 230 mm

Ø 2.0 mm	Ø 2.5 mm	Ø 3.0 mm	Ø 3.5 mm	Ø 4.0 mm	Ø 4.5 mm	Ø 5.0 mm
1600	1602	1604	1606	1608	1610	1612

Calibrated Steinmann Pins (Watson Jones), trocar point and round ends, length 230 mm

Ø 2.0 mm	Ø 2.5 mm	Ø 3.0 mm	Ø 3.5 mm	Ø 4.0 mm	Ø 4.5 mm	Ø 5.0 mm
1620	1622	1624	1626	1628	1630	1632

SAFEMED INSDUSTRY

SAFEMED INSDUSTRY

Roy Camille Spinal Instrumentation System

Dorsal - Lumbar Plates curved

Cat-N°	holes	length
2000	4	49 mm
2002	5	62 mm
2004	7	90 mm
2006	9	114 mm
2008	11	140 mm
2010	13	166 mm
2012	15	192 mm
2014	17	218 mm
2016	19	244 mm
2018	21	270 mm

Ø of thread	4.5 mm	4.0 mm
Ø of core	3.0 mm	1.9 mm
Ø of head	8.0 mm	6.0 mm
length	Cat-N°	Cat-N°
14 mm	0200	0144
16 mm	0202	0146
18 mm	0204	0148
20 mm	0206	0150
22 mm	0208	0152
24 mm	0210	0154
26 mm	0212	0156
28 mm	0214	0158
30 mm	0216	0160
32 mm	0218	
34 mm	0220	
36 mm	0222	
38 mm	0224	
40 mm	0226	
42 mm	0228	
44 mm	0230	
46 mm	0232	
48 mm	0234	
50 mm	0236	

Cervical Plates straight

Cat-N°	holes	length
2040	2	23 mm
2042	3	36 mm
2044	4	49 mm
2046	5	62 mm

Cervical Spinal Plates

Cat-N°	holes	size
2050	1	small
2052	2	medium
2054	3	large

SAFEMED INSDUSTRY

Small Plates for Cervical Spine
For Screws with 2.7 mm and 3.5 mm diameter

Cat.-N°	holes	size	Length
2200	5	16 mm	23 mm
2202	5	18 mm	25 mm
2204	5	21 mm	28 mm
2206	8	16 + 18 mm	41 mm
2208	8	18 + 21 mm	46 mm
2210	11	16 + 18 + 18 mm	59 mm

Cat.-N°	holes	size	Length
2212	20	16 mm	103 mm
2214	20	18 mm	115 mm
2216	20	21 mm	133 mm

2250 28 mm
2252 30 mm
2254 32 mm
2256 37 mm

2258 40 mm
2260 44 mm
2262 46 mm
2264 48 mm
2266 50 mm
2268 54 mm
2270 60 mm
2272 66 mm
2274 72 mm

SAFEMED INSDUSTRY

SAFEMED INSDUSTRY

Instrumentation for theTreatment of Scoliotic and Fractured Spine

Distraction Rod Ø 6.4 mm, length 0-356
Lenght measured from collar to first ratchet

Cat-N°	1000	1004	1008	1012	1016	1020	1024	1028
Length	0 mm	25 mm	51 mm	76 mm	102 mm	127 mm	152 mm	179 mm
Cat-N°	1032	1036	1040	1044	1048	1050	1052	1056
Length	203 mm	229 mm	254 mm	279 mm	305 mm	318 mm	330 mm	356 mm

other length available on request

Distraction Hooks for use
at round end (Collar End)
of Distraction Rods

1078
sharp

1080
blunt

Distraction Hooks for Ratchet End

1070
sharp

1072
blunt

1086
Washer

1074
sharp
with rib

1076
blunt
with rib

Threaded Sacral Rod with Trocar point Ø 6.4 mm
1100 length 203 mm
1102 length 302 mm

1110
Sacral Rod Nut
Thread Ø ¼", 6.4 mm

1112
Eyelet for connection of
Sacral Rod with Distraction Rod

SAFEMED INSDUSTRY

Instrumentation for theTreatment of Scoliotic and Fractured Spine

1120
Threaded Compression Rod Ø 4.8 mm, length 254 mm, complete with 6 nuts

Compression Hooks for use
with Threaded Compression
Rod Ø 4.8 mm

1150
sharp

1152
blunt

1126
Hex Nut only

1160
Threaded Compression Rod Ø 3.2 mm, length 254 mm, complete with 6 nuts

Distruction-Fusion-Instrumentation

Compression Hooks for use
with Threaded Compression
Rod Ø 3.2 mm

1190
sharp

1166
Hex Nut only

Cat-N°	Rod Length	
	Inch	mm
1330	1 3/16	3
1332	1 9/16	4
1334	2	5
1336	2 3/8	6
1338	2 3/4	7
1340	3 1/8	8
1342	3 9/16	9
1344	4	10

SAFEMED INSDUSTRY

1480
"C"-Spreader

1482
French Rod Bender

SPINAL ELEVATOR

1490	9 mm broad
1492	13 mm broad
1494	16 mm broad
1496	19 mm broad

1500
Rod Clamp
Small Threaded

1502
Rod Clamp
Large Threaded

1510
Outrigger Distraction unit

SAFEMED INSDUSTRY

Plates for Pelvic Fractures

Reconstruction Plates - 4.5 mm
For use with 4.5 mm Cortex Screws. Can be bent in three dimesiones with special bending irons (do not bend more than 15° between holes)

Profile: 12 x 2.8 mm
Distance between holes: 16.0 mm

	Length	Holes
1100	54 mm	3
1102	61 mm	4
1104	77 mm	5
1106	93 mm	6
1108	109 mm	7
1110	125 mm	8
1112	141 mm	9
1114	157 mm	10
1116	173 mm	11
1118	189 mm	12
1120	205 mm	13
1122	221 mm	14
1124	237 mm	15
1126	253 mm	16

Profile: 12 x 2.8 mm
Distance between holes: 12.0 mm
Curving radius: 100 mm

Curved Reconstruction Plates - 3.5 mm
Primary indication: Pelvic and acetabular reconstructive surgery

	Length	Holes
1140	70 mm	6
1142	94 mm	8
1144	118 mm	10
1146	142 mm	12
1148	166 mm	14
1150	190 mm	16
1152	214 mm	18

SAFEMED INSDUSTRY

Bone Screws, self tapping

Ø of thread	4.5 mm	4.5 mm
Ø of core	3.0 mm	
Pitch		4.5 mm
Ø of head	8.0 mm	8.0 mm
Length		
14 mm	1200	
16 mm	1202	
18 mm	1204	
20 mm	1206	
22 mm	1208	1280
24 mm	1210	1282
25 mm		
26 mm	1212	1284
28 mm	1214	1286
30 mm	1216	1288
32 mm	1218	1290
34 mm	1220	1292
35 mm		
36 mm	1222	1294
38 mm	1224	1296
40 mm	1226	1298
42 mm	1228	1300
44 mm	1230	1302
45 mm		
46 mm	1232	1304
48 mm	1234	1306
50 mm	1236	1308
52 mm	1238	1310
54 mm	1240	1312
55 mm		
56 mm	1242	1314
58 mm	1244	1316
60 mm	1246	1318
65 mm	1248	1320
70 mm	1250	1322
75 mm	1252	1324
80 mm	1254	1326
85 mm	1256	1328
90 mm	1258	1330
95 mm	1260	1332
100 mm	1262	1334
105 mm	1264	1336
110 mm	1266	1338
115 mm	1271	
120 mm	1272	

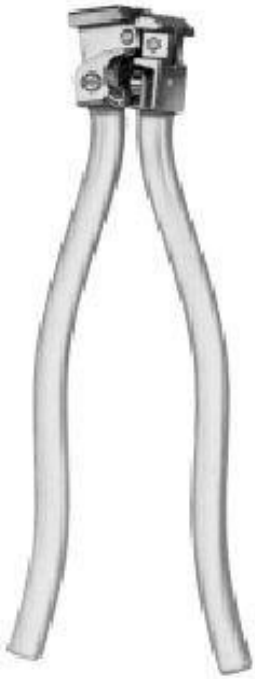

1400
Bending Pliers for
2.7 mm and 3.5 mm Plates

1420	Bending Templates for curved Reconstruction Plates 4.5 mm
1422	Bending Templates for straight Reconstruction Plates 4.5 mm
1424	Bending Templates for curved Reconstruction Plates 3.5 mm
1426	Bending Templates for straight Reconstruction Plates 3.5 mm

1404
Bending Iron
for 3.5 mm and 4.5 mm Plates

1430	Osteotomy Chisels 304 mm 15 mm
1432	Osteotomy Chisels 304 mm 20 mm

SAFEMED INSDUSTRY

0090
Tap Handle for Jacobs Chuck

0090
Sharp Bone Hook

0090
long wide tip for Pelvic
Surgery, width 24 mm

0521 Pelvic Reposition Forceps 190 mm for screws 3.5 mm

0523 Pelvic Reposition Forceps 190 mm for screws 4.5 mm

0604
Reduction Forceps
with points 200 mm

SAFEMED INSDUSTRY

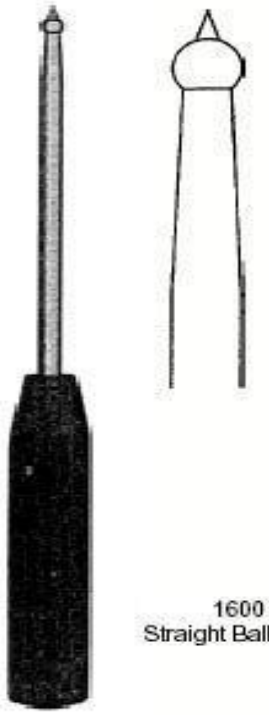

1600
Straight Ball Spike 12"

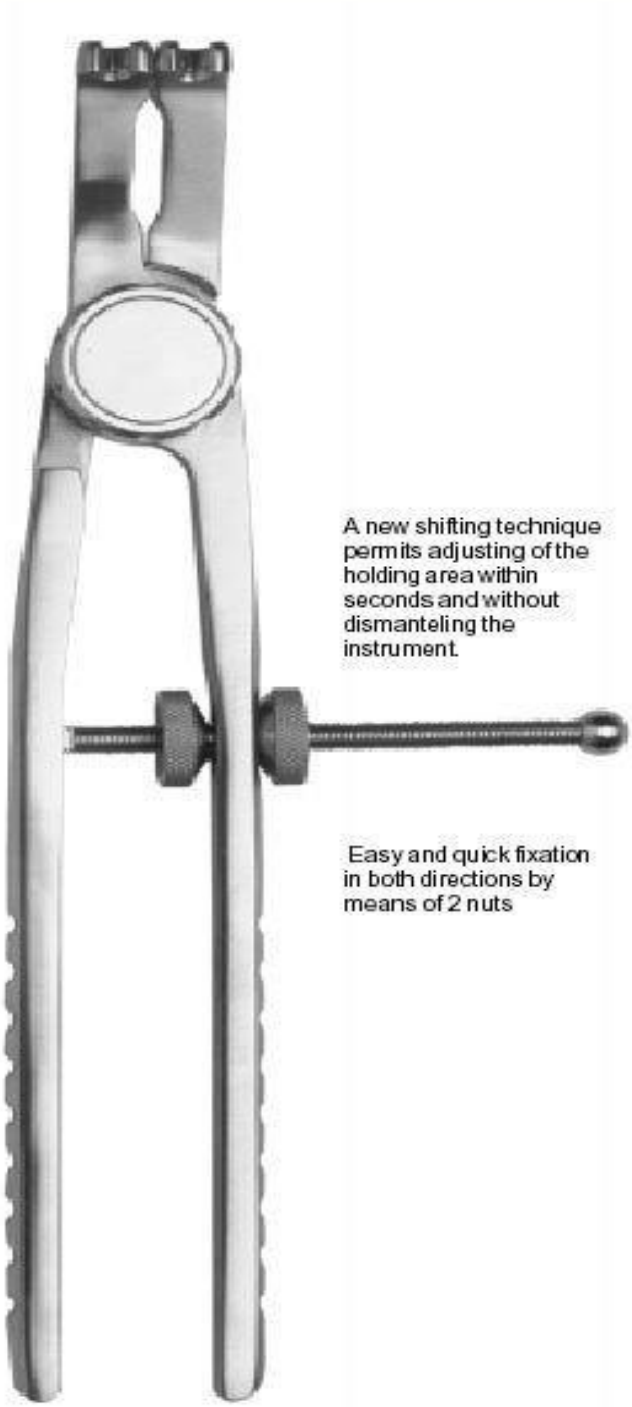

A new shifting technique permits adjusting of the holding area within seconds and without dismanteling the instrument.

Easy and quick fixation in both directions by means of 2 nuts

1516
Schanz Screw
Ø 6 mm, 200 mm

1404
Reposition Forceps

SAFEMED INSDUSTRY

Pelvic Instruments

1556
Pelvic Repositioning Forceps
400 mm

1558
Pelvic Repositioning Forceps
400 mm

SAFEMED INSDUSTRY

Cerclage Wire, soft,
in coils of 10m

Ø mm	0.2	0.3	0.4	0.5	0.6	0.7	0.8	0.9	1.0	1.2	1.5
Gauge	31	29	27	25	23	22	21	20	19	18	17
Cat.-N°	3002	3003	3004	3005	3006	3007	3008	3009	3010	3012	3015

Cerclage Wires with eye,
soft

	Diameter	Length
0020	0.8 mm	280 mm
0022	1.0 mm	280 mm
0023	1.2 mm	280 mm
0024	1.0 mm	600 mm
0025	1.2 mm	600 mm

0380 Wire Tightener

1470 Parham Martin Band Tigthener

1471 Parham Metal Bone Bands 19 cm, x 0.5 mm

SAFEMED INSDUSTRY

Kirschner Wires

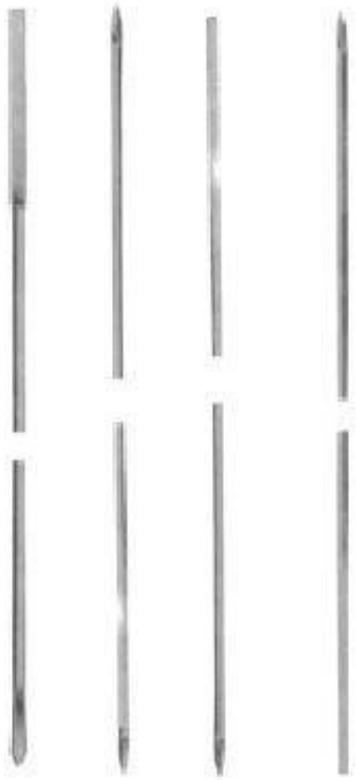

Point	Trocar	Trocar	Trocar	Lancet point
shaft end	flat	round	Trocar	flat
Length	310 mm	310 mm	310 mm	310 mm
Ø 0.8 mm	3208			
Ø 1.0 mm	3210	3310	0140	3250
Ø 1.2 mm	3212	3312	0141	3252
Ø 1.4 mm	3214	3314	0142	3254
Ø 1.5 mm	3215	3315	0143	3255
Ø 1.6 mm	3216	3316	0144	3256
Ø 1.7 mm	3217			
Ø 1.8 mm	3218	3318	0145	3258
Ø 2.0 mm	3220	3320	0146	3260
Ø 2.2 mm	3222	3322	0147	3262
Ø 2.5 mm	3225	3325	0148	3265
Ø 3.0 mm		3330		

Point	Trocar	Trocar	Trocar	Trocar
shaft end	round	flat	round	Trocar
Length	70 mm	150 mm	150 mm	150 mm
Ø 0.8 mm	3338	3278	3368	0280
Ø 0.9 mm				
Ø 1.0 mm	3340	3280	3370	0282
Ø 1.1 mm				
Ø 1.2 mm		3282	3372	0284
Ø 1.4 mm		3284	3374	0286
Ø 1.5 mm	3345	3285	3375	0288
Ø 1.6 mm		3286	3376	0290
Ø 1.7 mm		3287		
Ø 1.8 mm		3288	3378	0292
Ø 2.0 mm		3290	3380	0294
Ø 2.2 mm		3292	3382	0296
Ø 2.5 mm	3355	3295	3385	0298
Ø 3.0 mm			3390	

SAFEMED INSDUSTRY

Kirschner Wires with thread and trocar points, round end

	Diameter	Length	Thread length
0310	1.6 mm	150 mm	5 mm
0312	1.6 mm	150 mm	15 mm
0314	2.0 mm	150 mm	15 mm
0316	2.0 mm	200 mm	15 mm
0318	2.5 mm	200 mm	15 mm
0320	2.5 mm	230 mm	20 mm
0322	2.5 mm	300mm	100 mm

0350
Bending Iron for
Kirschner Wires

3160 17 cm, 6¾"
3161 17 cm, 6¾", with groove
Round Pliers with
serrated jaws

3165 19 cm, 7½"
Pliers with
serrated jaws

SAFEMED INSDUSTRY

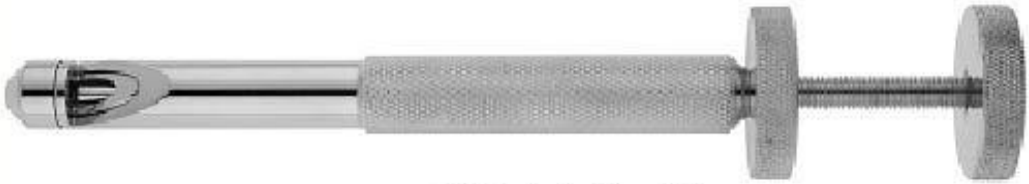

3100 Loute 22 cm, 8¾"
Bone Wire Tightener

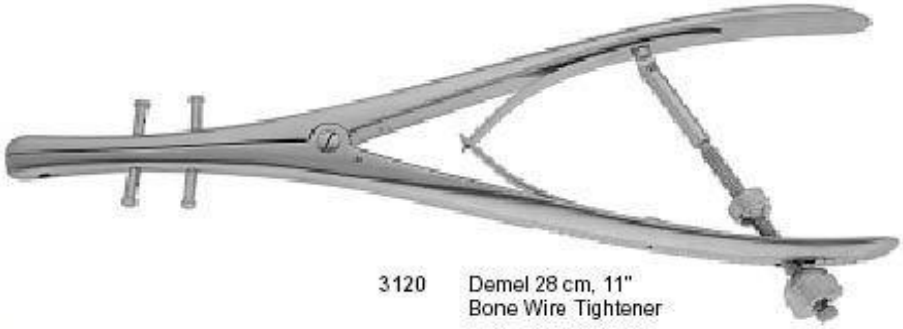

3120 Demel 28 cm, 11"
Bone Wire Tightener

0375 Wire Guide 45 mm

0377 Wire Guide 70 mm

0378 Wire Tightener

SAFEMED INSDUSTRY

SAFEMED INSDUSTRY

3153
Extraction Pliers
for boring wire, 130 mm

3154
Extraction Pliers
for boring wire, 180 mm

3172
Extraction Pliers
for wire, 180 mm

3178
Extraction Pliers
TC jaws, 180 mm

0396
Vise Grip 180 mm
Chrome Vanadium

0397
Vise Grip 200 mm
stainless steel

0398
Vise Grip 180 mm
Stainless Steel

0399
Vise Grip 240 mm
Stainless Steel

0401
Flat-nosed Pliers, paralell,
without lateral Wire Cutter,
180 mm Chrome Vanadium

0402
Flat-nosed Pliers, paralell,
without lateral Wire Cutter,
180 mm Stainless Steel

0400
Flat-nosed Pliers, paralell,
with lateral Wire Cutter,
180 mm Chrome Vanadium

0403
Flat-nosed Pliers, paralell,
with lateral Wire Cutter,
180 mm Stainless Steel

SAFEMED INSDUSTRY

Extraction Instruments

0404
Extraction Pliers, 190 mm, TC

0406
Extraction Pliers, 200 mm, TC

SAFEMED INSDUSTRY

4121 Universal Wire cutting Scissors
1099 Universal Wire cutting Scissors
with TC Blades

0414
Wire Cutter

0416
Wire Tigthening TC Pliers

3150
Wire Bending/Cutting Pliers
soft wire: max Ø 1.5 mm
hard wire: max Ø 1.0 mm

0420
Wire Bending/Cutting Pliers
soft wire: max Ø 1.5 mm
hard wire: max Ø 1.0 mm

0422
TC Wire Cutter 15 cm
soft wire: max Ø 2.0 mm
hard wire: max Ø 1.2 mm

SAFEMED INSDUSTRY

SAFEMED INSDUSTRY

Wire Cutters

3193
TC Wire Cutter 180 mm
soft wire: max Ø 2.4 mm
hard wire: max Ø 1.7 mm

0432
TC Wire Cutter 180 mm
front and lateral cutting action
soft wire: max Ø 2.0 mm
hard wire: max Ø 1.5 mm

3195
TC Wire Cutter 230 mm
soft wire: max Ø 3.0 mm
hard wire: max Ø 2.5 mm

0436
TC Wire Cutter 220 mm
soft wire: max Ø 2.5 mm
hard wire: max Ø 2.2 mm

0438
TC Wire Cutter 140 mm
soft wire: max Ø 1.2 mm
hard wire: max Ø 0.8 mm

0440
TC Wire Cutter
soft wire: max Ø 3.0 mm
hard wire: max Ø 2.5 mm

SAFEMED INSDUSTRY

Wire Cutters

0441
TC Wire Cutter

0442
TC Wire Cutter cannulated 180 mm
soft wire: max Ø 2.4 mm
hard wire: max Ø 1.8 mm

-3191
Wire Cutter
hard wire 2.0 mm

SAFEMED INSDUSTRY

Wire Cutters

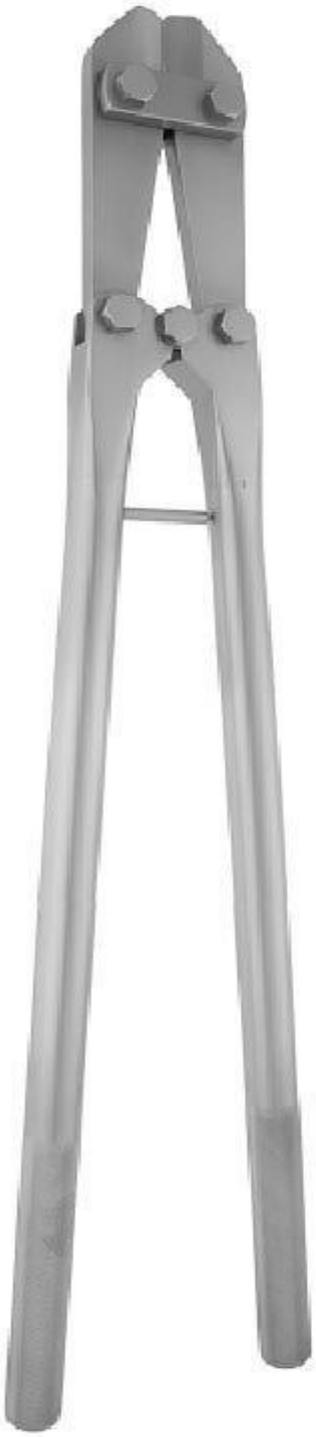

0444
540 mm Cutter for Kirschner Wires
Steinmann Pins up to Ø 6 mm, hard
0446
dto. 460 mm

0450
575 mm
for max. hard wire Ø 6.0 mm

0452
260 mm
for max. hard wire Ø3.5 mm

SAFEMED INSDUSTRY

Wire length	Wire Ø 0.8 mm	Wire Ø 1.0 mm	Wire Ø 1.2 mm	Wire Ø 1.4 mm	Wire Ø 1.6 mm	Wire Ø 2.0 mm	Wire Ø 2.2 mm	Wire Ø 2.5 mm
16 cm	0850	0852	0854	0856	0858	0860	0862	0864
31 cm	0870	0872	0874	0876	0878	0880	0882	0884

0890
Vickers Easy-Driver

This specially designed dispender holds four different wire gauges ø 1.0 / 1.2 / 1.4 / and 1.6 mm, each 10 cm long.

0892
Wire Drill Dispenser

SAFEMED INSDUSTRY

Wire Extension

Kirschner, American Pattern

	Size	Max. jaw opening
3660	Medium	130 mm
3661	Large	185 mm
3662	x-Large	220 mm

Kirschner

	Size
3650	40 x 140 mm
3651	60 x 220 mm

Kirschner

	Width	depth
3620	20.0 cm	15.5 cm
3621	15.5 cm	15.5 cm
3622	13.5 cm	13.0 cm
3623	12.0 cm	12.0 cm
3624	10.5 cm	10.0 cm
3625	9.5 mm	11.0 cm
3626	9.5 mm	7.0 cm

3637
Wire strainer for Kirschner Extension Bows

Zughaken
Traction hooks
Ganchos de tracción
Crochets pour traction

0360 0361

0492
Screw Nut Wrench
14 x 17 mm

SAFEMED INSDUSTRY

	Inside length	Inside width
3599	90 mm	75 mm
3600	160 mm	90 mm
3601	210 mm	110 mm
3602	210 mm	150 mm

42-07-0520
Hexagonal Wrench for Tibia Bolt

0524	Tibia Bolt Ø 2.4 mm, 180 mm length
0526	Tibia Bolt Ø 3.2 mm, 180 mm length

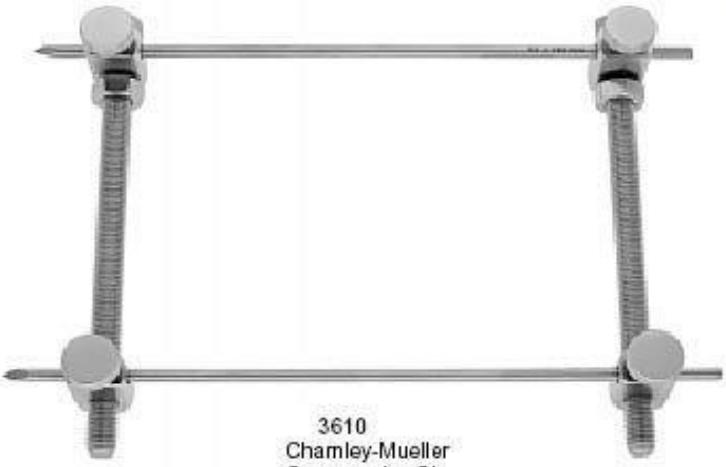

3610
Charnley-Mueller
Compression Clamp