SafeMed Industry - Miscellaneous

32-104-07
Spirit Lamp
120 ccm

32-112-12
Spirit Lamp
120 ccm

32-120-12
Spirit Lamp
120 ccm

32-146-04
Spare Wick
Ø 4 mm
round, per meter
Spare Wick

32-147-04
Spare Wick
Ø 4 mm
round, 12 cm long
Spare Wick

32-148-12
Spare Wick
12 mm
flat, per meter
Spare Wick

32-149-12
Spare Wick
12 mm
flat, 12 cm long
Spare Wick

SafeMed Industry
Muslim Masjid Street,
Opp Muslim Masjid, Roras Road,
Muzaffar Pur, Sialkot 51310 Pakistan.

Phone: +92 523572570
Mobile: +92 314 726 202
WhatsApp: +92 314 726 202

Website: Safe-Med.Co
E-Mail: Sales@Safe-Med.Co

SAFEMED INSDUSTRY

33-410-12
Simplex
Tubing Clamp
12 mm

33-424-13
Hoffmann
Tubing Clamp
13 mm

33-424-17
Hoffmann
Tubing Clamp
17 mm

33-424-20
Hoffmann
Tubing Clamp
20 mm

33-424-25
Hoffmann
Tubing Clamp
25 mm

33-424-30
Hoffmann
Tubing Clamp
30 mm

33-424-40
Hoffmann
Tubing Clamp
40 mm

DI-33-435-40
Mohr
Pinchcock
40 mm

DI-33-435-50
Mohr
Pinchcock
50 mm

DI-33-435-60
Mohr
Pinchcock
60 mm

33-435-70
Mohr
Pinchcock
70 mm

33-435-80
Mohr
Pinchcock
80 mm

33-470-17
Tubing Clamp for
high pressure Ø
12-17 mm

33-470-21
Tubing Clamp for
high pressure Ø
16-21 mm

33-470-25
Tubing Clamp for
high pressure Ø
20-25 mm

33-470-29
Tubing Clamp for
high pressure Ø
24-29 mm

33-500-15
Bottle-opener
for infusion
bottles

SafeMed Industry
Muslim Masjid Street,
Opp Muslim Masjid, Roras Road,
Muzaffar Pur, Sialkot 51310 Pakistan.

Phone: +92 523572570
Mobile: +92 314 726 202
WhatsApp: +92 314 726 202

Website: Safe-Med.Co
E-Mail: Sales@Safe-Med.Co

SAFEMED INSDUSTRY

34-430-01
13.5cm 5 3/8
Pencil with screw cap, protection sleeve and exchangeable hard metal pin for metal, glass, plastic etc.

34-430-02
Spare Pin, hard metal for ref. 65-430-01Spare pin, hard metal

34-432-00
14cm 5 ½ Pencil with hard metal pin for metal, glass, plastic etc.

34-433-00
14cm 5 ½ Pencil with loupe and hard metal pin for metal, glass, plastic etc.

34-435-01
Martin-Vibroscript
Electric Marking
and Writing Apparatus
complete with connecting cable and exchangeable hard metal pin, 220 volts for metal, glass, plastic etc.

34-436-05
Spare Pin, hard metal
for ref. 65-432-00,
65-433-00 + 65-435-01
Spare pin, hard metal

SafeMed Industry
Muslim Masjid Street,
Opp Muslim Masjid, Roras Road,
Muzaffar Pur, Sialkot 51310 Pakistan.

Phone: +92 523572570
Mobile: +92 314 726 202
WhatsApp: +92 314 726 202

Website: Safe-Med.Co
E-Mail: Sales@Safe-Med.Co

SAFEMED INSDUSTRY

35-118-00
Oxygen Cylinder
Carriage
mobile, for all sizes of
cylinders, height
adjustable, plastic coated

35-120-04
Oxygen Cylinder
Carriage
mobile, plastic coated

35-123-05
Infusion Stand
mobile, plastic coated,
height adjustable,
with 4 hooks and glass

SafeMed Industry
Muslim Masjid Street,
Opp Muslim Masjid, Roras Road,
Muzaffar Pur, Sialkot 51310 Pakistan.

Phone: +92 523572570
Mobile: +92 314 726 202
WhatsApp: +92 314 726 202

Website: Safe-Med.Co
E-Mail: Sales@Safe-Med.Co

35-141-05
Bucket Trolley
with guide bar,
without bucket
only = ref. 73-
454-15

35-142-05
Bucket Trolley
without guide bar,
without bucket
only =
ref. 73-454-15

SafeMed Industry
Muslim Masjid Street,
Opp Muslim Masjid, Roras Road,
Muzaffar Pur, Sialkot 51310 Pakistan.

Phone: +92 523572570
Mobile: +92 314 726 202
WhatsApp: +92 314 726 202

Website: Safe-Med.Co
E-Mail: Sales@Safe-Med.Co

SAFEMED INSDUSTRY

DI-36-151-05
Wash Basin Stand
mobile, for 1 basin
without wash basin
wash basin only =
ref. 56-170-29

DI-36-152-05
Wash Basin Stand
mobile, for 2 basins
without wash basins
wash basin only =
ref. 56-170-29

36-170-05
Arm and Leg Rest
height adjustable

36-170-29
wash basin only

SafeMed Industry
Muslim Masjid Street,
Opp Muslim Masjid, Roras Road,
Muzaffar Pur, Sialkot 51310 Pakistan.

Phone: +92 523572570
Mobile: +92 314 726 202
WhatsApp: +92 314 726 202

Website: Safe-Med.Co
E-Mail: Sales@Safe-Med.Co

SAFEMED INSDUSTRY

35-224-04
Step white

35-224-05
Stephon
mium plated

35-224-06
Step
18/8
martinit

35-226-04
Step white

35-226-05
Step chromium
plated

35-226-06
Step
18/8 martinit

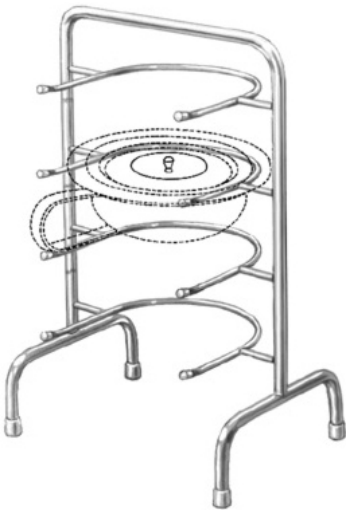

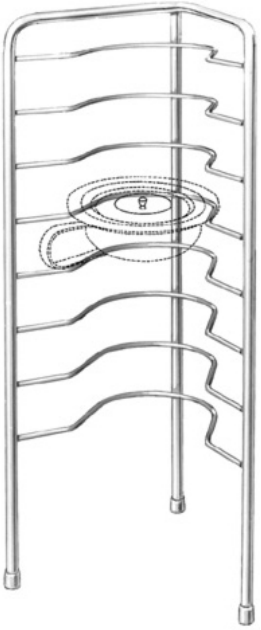

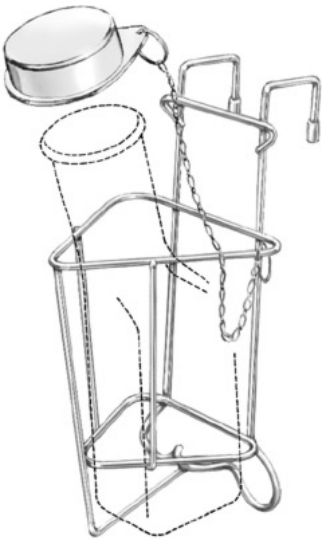

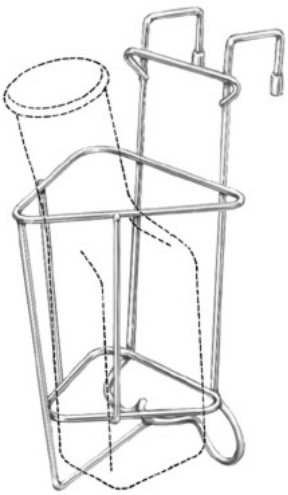

35-304-04
Carrying Rack
for Bed Pans
white, for
4 bed pans
Carrying Rack
for Bed Pans

35-308-04
Storing Rack
for Bed Pans
white, for 8
bed pans

35-310-04
Urinal Rack
with cap,
for 1 urinal
white, PVC-coated

35-311-04
Urinal Rack
without cap,
for 1 urinal
white, PVC-coated

SafeMed Industry

Muslim Masjid Street,
Opp Muslim Masjid, Roras Road,
Muzaffar Pur, Sialkot 51310 Pakistan.

Phone: +92 523572570

Mobile: +92 314 726 202
WhatsApp: +92 314 726 202

Website: Safe-Med.Co

E-Mail: Sales@Safe-Med.Co

SAFEMED INSDUSTRY

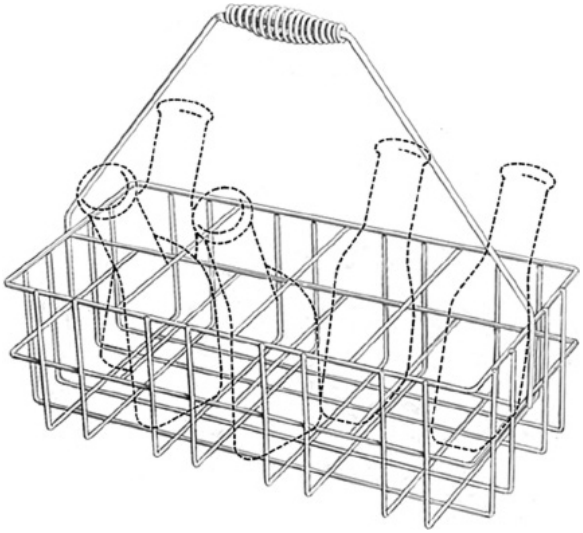

35-316-04
Carrying Rack for Urinal
for 6 urinals, white,
PVC-coated Carrying
Rack for Urinals

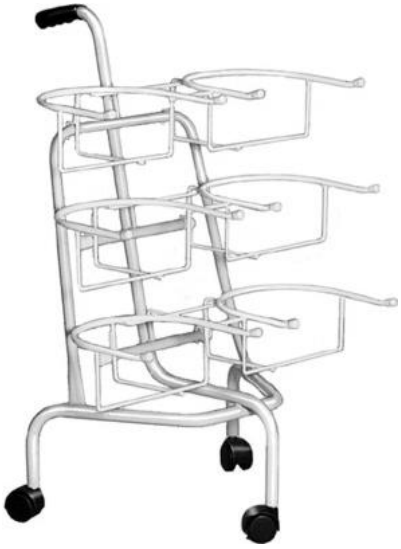

35-326-04
Trolley for Bed Pans
white, for 6 bed pans

35-328-04
Trolley for Urinal white,
for 15 urinals

35-351-03
Waste Collector Rey,
with pedal
Waste Collector

35-385-00
Bed Cradle
600 x 500 x 350 mm
foldable, PVC-coated

35-387-00
Bed Cradle
540 x 500 x 600 mm
foldable, PVC-coated

SafeMed Industry
Muslim Masjid Street,
Opp Muslim Masjid, Roras Road,
Muzaffar Pur, Sialkot 51310 Pakistan.

Phone: +92 523572570
Mobile: +92 314 726 202
WhatsApp: +92 314 726 202

Website: Safe-Med.Co
E-Mail: Sales@Safe-Med.Co

36-101-00
Martin aqua jet
Water Jet Pistol
complete, with 9
tips 36-101-01 to
36-101-09, 1 m
pressure tube, strap and
suspension hook

SafeMed Industry
Muslim Masjid Street,
Opp Muslim Masjid, Roras Road,
Muzaffar Pur, Sialkot 51310 Pakistan.

Phone: +92 523572570
Mobile: +92 314 726 202
WhatsApp: +92 314 726 202

Website: Safe-Med.Co
E-Mail: Sales@Safe-Med.Co

SAFEMED INSDUSTRY

36-101-01
Martin aqua jet Cleansing Tip for bottles Fig. 1

36-101-02
Martin aqua jet Cleansing Tip for cones of record-syringes Fig. 2

36-101-03
Martin aqua jet Cleansing Tip for catheters Fig. 3

36-101-04
Martin aqua jet Cleansing Tip for drainage tubing's Fig. 4

36-101-05
Martin aqua jet Cleansing Tip for receptacles Fig. 5

36-101-06
Martin aqua jet Cleansing Tip for hypodermic needles with Record-cone Fig. 6

36-101-07
Martin aqua jet Cleansing Tip for hypodermic needles with Luer-cone Fig. 7

36-101-08
Martin aqua jet Cleansing Tip for measuring and volumetric pipettes Fig. 8

36-101-09
Martin aqua jet Cleansing Tip for fine pipettes Fig. 9,

36-101-10
Martin aqua jet Cleansing Tip cleansing tip, 31 cm, straight Fig. 10

36-101-11
Martin aqua jet Cleansing Tip cleansing tip, 30 cm, curved Fig. 11

SafeMed Industry
Muslim Masjid Street,
Opp Muslim Masjid, Roras Road,
Muzaffar Pur, Sialkot 51310 Pakistan.

Phone: +92 523572570
Mobile: +92 314 726 202
WhatsApp: +92 314 726 202

Website: Safe-Med.Co
E-Mail: Sales@Safe-Med.Co

36-101-20
Martin aqua jet
Water Jet Pistol
only

36-102-02
Coupling
½ inch
Coupling

36-102-03
Coupling
3/4 inch
Coupling

SafeMed Industry
Muslim Masjid Street,
Opp Muslim Masjid, Roras Road,
Muzaffar Pur, Sialkot 51310 Pakistan.

Phone: +92 523572570
Mobile: +92 314 726 202
WhatsApp: +92 314 726 202

Website: Safe-Med.Co
E-Mail: Sales@Safe-Med.Co

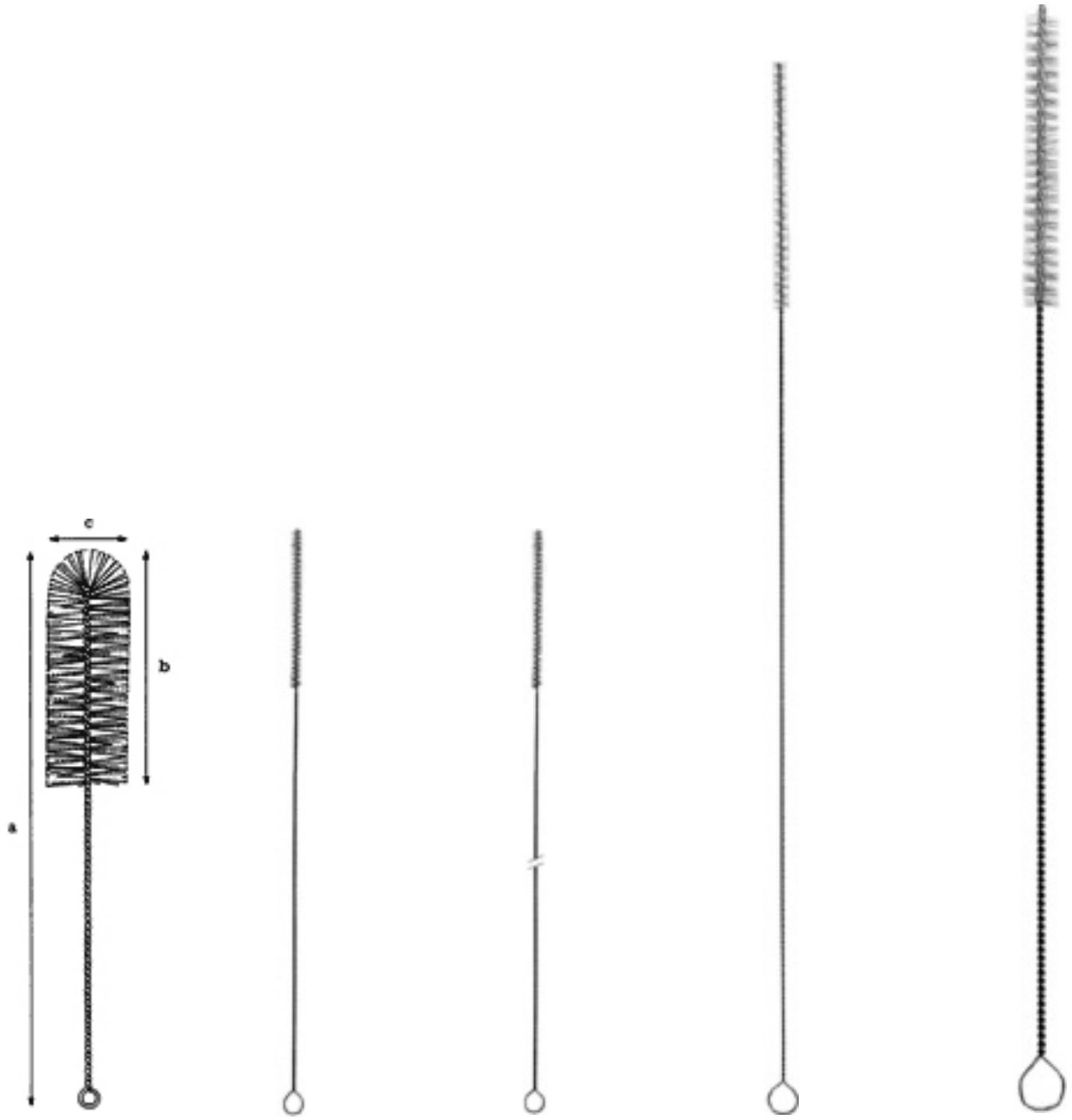

36-301-03
Cleaning Brush
245 x 65 x 3 mm

36-303-03
Cleaning Brush
420 x 65 x 3 mm

36-304-07
Cleaning Brush
285 x 75 x 7 mm

34-306-08
Cleaning Brush
270 x 65 x 8 mm

SafeMed Industry
Muslim Masjid Street,
Opp Muslim Masjid, Roras Road,
Muzaffar Pur, Sialkot 51310 Pakistan.

Phone: +92 523572570
Mobile: +92 314 726 202
WhatsApp: +92 314 726 202

Website: Safe-Med.Co
E-Mail: Sales@Safe-Med.Co

SAFEMED INSDUSTRY

36-306-12	36-306-13	36-306-15	36-308-20	36-308-25	36-308-30
Cleaning Brush	Cleaning Brush	Cleaning Brush	Cleaning Brush	Cleaning Brush	Cleaning Brush
270 x 65 x 12 mm	215 x 60 x 13 mm	215 x 70 x 15 mm	215 x 65 x 20 mm	215 x 65 x 25 mm	215 x 65 x 30 mm

SafeMed Industry

Muslim Masjid Street,
Opp Muslim Masjid, Roras Road,
Muzaffar Pur, Sialkot 51310 Pakistan.

Phone: +92 523572570

Mobile: +92 314 726 202
WhatsApp: +92 314 726 202

Website: Safe-Med.Co

E-Mail: Sales@Safe-Med.Co

SAFEMED INSDUSTRY

36-315-00 Cleaning Brus set of 5 brushes	36-315-13 Cleaning Brush 215 x 60 x 13 mm	36-315-15 Cleaning Brush 215 x 65 x 15 mm	36-315-20 Cleaning Brush 215 x 95 x 20 mm	36-315-25 Cleaning Brush 215 x 95 x 25 mm	36-315-28 Cleaning Brush 215 x 100 x 28 mm

SafeMed Industry
Muslim Masjid Street,
Opp Muslim Masjid, Roras Road,
Muzaffar Pur, Sialkot 51310 Pakistan.

Phone: +92 523572570
Mobile: +92 314 726 202
WhatsApp: +92 314 726 202

Website: Safe-Med.Co
E-Mail: Sales@Safe-Med.Co

SAFEMED INSDUSTRY

36-318-12	36-318-15	36-318-30	36-318-50	36-324-35	36-326-40	36-327-60
Cleaning Brush	Cleaning Brush	Cleaning Brush	Cleaning Brush	Cleaning Brush	Cleaning Brush	Cleaning Brush
275 x 65 x 12 mm	275 x 80 x 15 mm	300 x 120 x 30 mm	320 x 130 x 50 mm	360 x 140 x 35 mm	420 x 180 x 40 mm	500 x 180 x 60 mm

SafeMed Industry

Muslim Masjid Street,
Opp Muslim Masjid, Roras Road,
Muzaffar Pur, Sialkot 51310 Pakistan.

Phone: +92 523572570

Mobile: +92 314 726 202
WhatsApp: +92 314 726 202

Website: Safe-Med.Co

E-Mail: Sales@Safe-Med.Co

SAFEMED INSDUSTRY

36-333-80
Cleaning Brush
490 x 180 x 80 mm

36-335-60
Cleaning Brush
450 x 180 x 60 mm

36-340-75
Cleaning Brush
420 x 130 x 75 mm

36-351-50
Cleaning Brush
330 x 130 x 50 mm

36-356-15
Cleaning Brush
400 x 190
x 8/20 mm
conical

36-359-18
Cleaning Brush
300 x 110
x 18/33 mm
conical

SafeMed Industry

Muslim Masjid Street,
Opp Muslim Masjid, Roras Road,
Muzaffar Pur, Sialkot 51310 Pakistan.

Phone: +92 523572570

Mobile: +92 314 726 202
WhatsApp: +92 314 726 202

Website: Safe-Med.Co

E-Mail: Sales@Safe-Med.Co

36-361-15
Cleaning Brush
320 x 70 x 15/25 mm
conical

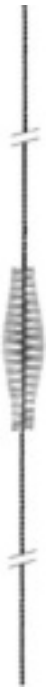

36-365-08
Cleaning Brush
420 x 60 x 8/15 mm
conical

36-367-16
Cleaning Brush
1000 x 180 x 16 mm

36-370-95
Cleaning Brush
210 x 95 mm

SafeMed Industry
Muslim Masjid Street,
Opp Muslim Masjid, Roras Road,
Muzaffar Pur, Sialkot 51310 Pakistan.

Phone: +92 523572570
Mobile: +92 314 726 202
WhatsApp: +92 314 726 202

Website: Safe-Med.Co
E-Mail: Sales@Safe-Med.Co

36-454-15
Waste Bucket
capacity 15 Li =
325 mm, h= 305 mm

36-455-15
Lid for waste bucket
ref. 73-454-15Lid

36-470-58
Martin
58cm 22 3/4"
Waste Forceps

36-474-55
Sauer Bruch
55cm 21 1/2"
Waste Forceps

SafeMed Industry
Muslim Masjid Street,
Opp Muslim Masjid, Roras Road,
Muzaffar Pur, Sialkot 51310 Pakistan.

Phone: +92 523572570
Mobile: +92 314 726 202
WhatsApp: +92 314 726 202

Website: Safe-Med.Co
E-Mail: Sales@Safe-Med.Co

SAFEMED INSDUSTRY

37-109-10
Rubber Tip
for steel crutches

37-109-20
Rubber Tip for
Alu minimum
crutches

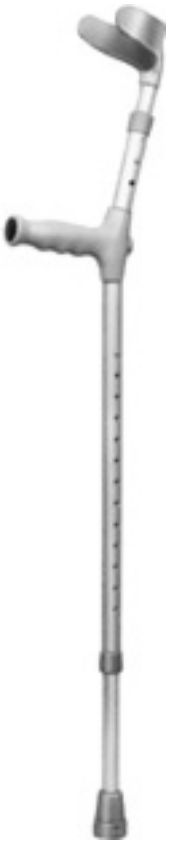

37-115-19
Crutch silver
anodized, adjustable
above and below with
double bolts,
with reflector,
silencing cap
and safety rubber
typal minimum

37-120-19
Crutch black anodized,
adjustable above and
below with double bolts,
upper plastic part in violet,
with reflector,
silencing cap and
safety rubber
typal minimum

37-200-13
Crutch silver
powder coated,
adjustable below with
push-button,
with reflector,
silencing cap
and safety
rubber tip steel

37-210-19
Crutch silver
anodized,
adjustable below
with double bolt,
with reflector,
silencing
cap and safety
rubber typal
minimum

37-312-19
Fritz Cane
silver
anodized,
adjustable
below with
double bolt, with
silencing cap
and safety rubber
typal minimum

SafeMed Industry

Muslim Masjid Street,
Opp Muslim Masjid, Roras Road,
Muzaffar Pur, Sialkot 51310 Pakistan.

Phone: +92 523572570

Mobile: +92 314 726 202
WhatsApp: +92 314 726 202

Website: Safe-Med.Co

E-Mail: Sales@Safe-Med.Co

SafeMed Industry

Muslim Masjid Street,
Opp Muslim Masjid, Roras Road,
Muzaffar Pur, Sialkot 51310 Pakistan.

Phone: +92 523572570

Mobile: +92 314 726 202
WhatsApp: +92 314 726 202

Website: Safe-Med.Co

E-Mail: Sales@Safe-Med.Co