SafeMed Industry - Hygiene, Storage

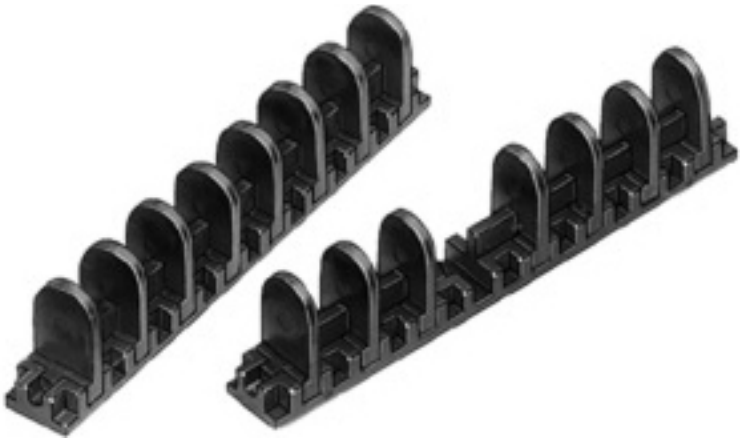

30-004-07
Storage strip only,
without plug-in elements
Storage strip

30-005-02
Plug-in Element
package of 16 pieces
Plug-in Element

30-085-27
Chattel
27cm 10 ½
Sterilizing Forceps

30-091-30
30cm 11 3/4
Sterilizing Forceps

SafeMed Industry
Muslim Masjid Street,
Opp Muslim Masjid, Roras Road,
Muzaffar Pur, Sialkot 51310 Pakistan.

Phone: +92 523572570
Mobile: +92 314 726 202
WhatsApp: +92 314 726 202

Website: Safe-Med.Co
E-Mail: Sales@Safe-Med.Co

30-142-10
Storage Rack for Petri Dishes
for up to 10
dishes of
8 - 10 cm Ø

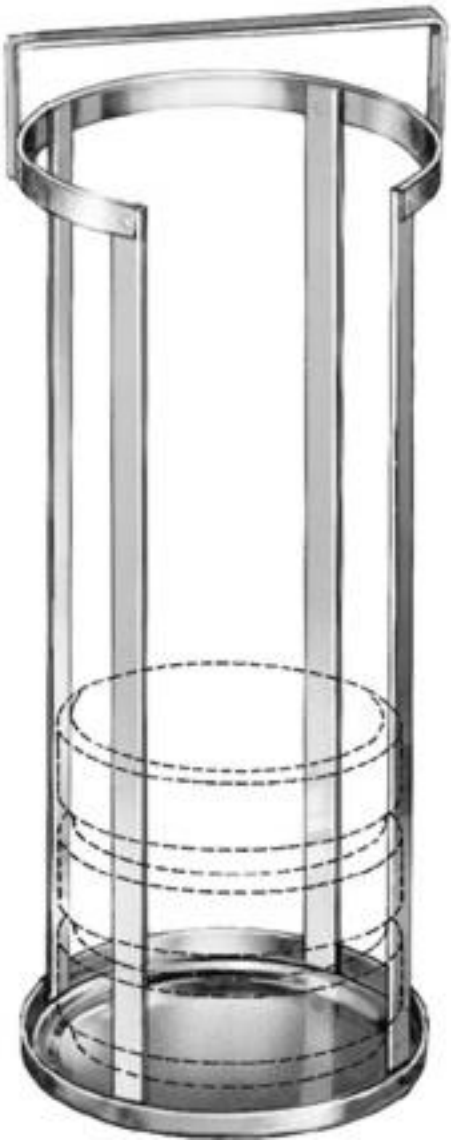

30-141-10
Storage Rack for Petri Dishes
for up to 10
dishes of 8 - 10 cm Ø
with fixation device

SafeMed Industry
Muslim Masjid Street,
Opp Muslim Masjid, Roras Road,
Muzaffar Pur, Sialkot 51310 Pakistan.

Phone: +92 523572570
Mobile: +92 314 726 202
WhatsApp: +92 314 726 202

Website: Safe-Med.Co
E-Mail: Sales@Safe-Med.Co

30-162-20
Sauerbruch
Needle Case
210 x 125 x 17 mm
perforated lid and bottom

30-164-20
Sauerbruch
Needle Case
210 x 125 x 17 mm
perforated lid and bottom

SafeMed Industry
Muslim Masjid Street,
Opp Muslim Masjid, Roras Road,
Muzaffar Pur, Sialkot 51310 Pakistan.

Phone: +92 523572570
Mobile: +92 314 726 202
WhatsApp: +92 314 726 202

Website: Safe-Med.Co
E-Mail: Sales@Safe-Med.Co

SAFEMED INSDUSTRY

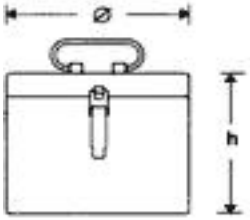

30-200-08 Schimmel Busch
Dressing Sterilizing Drum x without filter laterally perforated lockable by sliding mechanism
30-200-12 Schimmel Busch
Dressing Sterilizing Drum x without filter laterally perforated lockable by sliding mechanism
30-200-14 Schimmel Busch
Dressing Sterilizing Drum x without filter laterally perforated lockable by sliding mechanism
30-200-16 Schimmel Busch
Dressing Sterilizing Drum x without filter laterally perforated lockable by sliding mechanism
30-200-17 Schimmel Busch
Dressing Sterilizing Drum x without filter laterally perforated lockable by sliding mechanism
30-200-19 Schimmel Busch
Dressing Sterilizing Drum x without filter laterally perforated lockable by sliding mechanism
30-200-20 Schimmel Busch
Dressing Sterilizing Drum x without filter laterally perforated lockable by sliding mechanism
30-200-23 Schimmel Busch
Dressing Sterilizing Drum x without filter laterally perforated lockable by sliding mechanism
30-200-24 Schimmel Busch
Dressing Sterilizing Drum x without filter laterally perforated lockable by sliding mechanism
30-200-28 Schimmel Busch
Dressing Sterilizing Drum x without filter laterally perforated lockable by sliding mechanism
30-200-29 Schimmel Busch
Dressing Sterilizing Drum x without filter laterally perforated lockable by sliding mechanism
30-200-33 Schimmel Busch
Dressing Sterilizing Drum x without filter laterally perforated lockable by sliding mechanism
30-200-34 Schimmel Busch
Dressing Sterilizing Drum x without filter laterally perforated lockable by sliding mechanism
30-200-38 Schimmel Busch
Dressing Sterilizing Drum x without filter laterally perforated lockable by sliding mechanism
30-200-39 Schimmel Busch
Dressing Sterilizing Drum x without filter laterally perforated lockable by sliding mechanism

SafeMed Industry
Muslim Masjid Street,
Opp Muslim Masjid, Roras Road,
Muzaffar Pur, Sialkot 51310 Pakistan.

Phone: +92 523572570
Mobile: +92 314 726 202
WhatsApp: +92 314 726 202

Website: Safe-Med.Co
E-Mail: Sales@Safe-Med.Co

30-296-75
Storage Case
120 x 65 x 13 mm
without contents

30-296-76
Silicone Tape
for storing micro bull
dog clips Silicone Tape

30-298-75
Storage Case
120 x 65 x 13 mm
with spiral spring
without contents

SafeMed Industry
Muslim Masjid Street,
Opp Muslim Masjid, Roras Road,
Muzaffar Pur, Sialkot 51310 Pakistan.

Phone: +92 523572570
Mobile: +92 314 726 202
WhatsApp: +92 314 726 202

Website: Safe-Med.Co
E-Mail: Sales@Safe-Med.Co

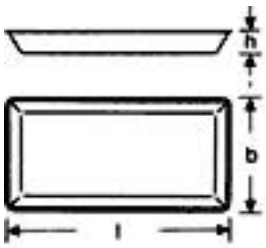

30-300-50
Needle Cassel x b x h

30-300-65
Needle Cassel x b x h

30-300-75
Needle Cassel x b x h

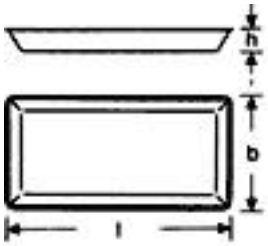

30-302-50
Needle Cassel x b x her foratid lid and bottom

30-302-65
Needle Cassel x b x her foratid lid and bottom

30-302-75
Needle Cassel x b x her foratid lid and bottom

SafeMed Industry
Muslim Masjid Street,
Opp Muslim Masjid, Roras Road,
Muzaffar Pur, Sialkot 51310 Pakistan.

Phone: +92 523572570
Mobile: +92 314 726 202
WhatsApp: +92 314 726 202

Website: Safe-Med.Co
E-Mail: Sales@Safe-Med.Co

30-309-65
Needle Case
Ø 65 mm x 15 mm
complete with perforated
interior box

30-310-65
Interior Box Ø 62 mm x 13 mm
Interior Box perforated
lid and bottom

30-313-08
Martin-Proper
Drill Collecting Box
Ø 78 mm x 63 mm
for disposal of used burrs
Drill Collecting Box slotted lid

30-335-01
Needle Case
150 x 95 x 13 mm

SafeMed Industry
Muslim Masjid Street,
Opp Muslim Masjid, Roras Road,
Muzaffar Pur, Sialkot 51310 Pakistan.

Phone: +92 523572570
Mobile: +92 314 726 202
WhatsApp: +92 314 726 202

Website: Safe-Med.Co
E-Mail: Sales@Safe-Med.Co

SAFEMED INSDUSTRY

30-335-02
Needle Case
150 x 95 x 13 mm
perforated lid
and bottom

30-335-03
Needle Case
150 x 95 x 13 mm
perforated bottom

30-335-05
Needle Case
150 x 95 x 13 mm
perforated lid
and bottom

30-337-01
Needle Case
150 x 95 x 13 mm

30-337-02
Needle Case
150 x 95 x 13 mm
perforated lid and bottom

30-340-02
Needle Tray
150 x 95 x 11 mm perforated bottom
Needle Tray

SafeMed Industry
Muslim Masjid Street,
Opp Muslim Masjid, Roras Road,
Muzaffar Pur, Sialkot 51310 Pakistan.

Phone: +92 523572570
Mobile: +92 314 726 202
WhatsApp: +92 314 726 202

Website: Safe-Med.Co
E-Mail: Sales@Safe-Med.Co

30-348-00
Storing Cup
Ø 75 mm x 75 mm
for micro instruments
with exchangeable silicone plate

30-348-01
Silicone Plate
Silicone plate

30-358-25
Martin
25cm 9 3/4"
Dressing Forceps in jar,
with cap
jar 20,5 cm high
with 25 cm long
dressing forceps

30-358-32
Martin
32cm 12 ½
Dressing Forceps in jar,
with cap
jar 25,5 cm high
with 32 cm long
dressing forceps

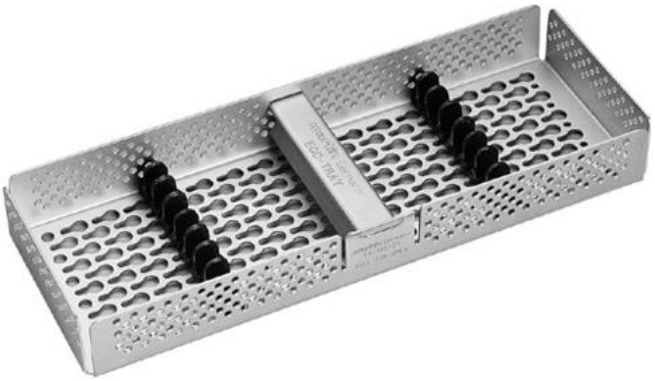

30-395-25
Martin-ECO
Storing Tray with fixation bar
ref. 55-395-26, 16 each plug-in elements
ref. 55-005-02 and 2
each storage strips
ref. 55-004-07240 x 85 x 30 mm
for delicate instruments up to 23 cm

30-395-18
Martin-ECO
Storing Tray with fixation bar
ref. 55-395-26, 16 each plug-in elements
ref. 55-005-02 and 2 each storage strips ref.
55-004-07180 x 85 x 30 mm
for delicate instruments up to 17 cm

SafeMed Industry
Muslim Masjid Street,
Opp Muslim Masjid, Roras Road,
Muzaffar Pur, Sialkot 51310 Pakistan.

Phone: +92 523572570
Mobile: +92 314 726 202
WhatsApp: +92 314 726 202

Website: Safe-Med.Co
E-Mail: Sales@Safe-Med.Co

30-395-26
Fixation Bar with silicone insert Fixation Bar

30-398-00
Storing Rockwall-mounted model with suspension for storage of Martin-Deponents

30-398-01
Storing Rack table-top model without suspension for storage of Martin-Deponents

SafeMed Industry
Muslim Masjid Street,
Opp Muslim Masjid, Roras Road,
Muzaffar Pur, Sialkot 51310 Pakistan.

Phone: +92 523572570
Mobile: +92 314 726 202
WhatsApp: +92 314 726 202

Website: Safe-Med.Co
E-Mail: Sales@Safe-Med.Co

SAFEMED INSDUSTRY

30-399-35
Deponent
Storage Case
245 x 135 x 35 mm
with textile filter
ref. 30-409-23
perforated bottom

30-399-50
Deponent
Storage Case
245 x 135 x 50 mm
with textile filter
ref. 30-409-23
perforated bottom

30-399-60
Deponent
Storage Case
245 x 135 x 60 mm
with textile filter
ref. 30-409-23
perforated bottom

SafeMed Industry
Muslim Masjid Street,
Opp Muslim Masjid, Roras Road,
Muzaffar Pur, Sialkot 51310 Pakistan.

Phone: +92 523572570
Mobile: +92 314 726 202
WhatsApp: +92 314 726 202

Website: Safe-Med.Co
E-Mail: Sales@Safe-Med.Co

30-400-23
Storage Case230 x 130 x 50 mm perforated lid and bottom with hinged lid
30-400-26
Storage Case260 x 150 x 50 mm perforated lid and bottom with hinged lid
30-400-30
Storage Case300 x 200 x 50 mm perforated lid and bottom with hinged lid
30-400-32
Storage Case325 x 275 x 50 mm perforated lid and bottom with hinged lid
30-400-42
Storage Case420 x 175 x 50 mm perforated lid and bottom with hinged lid
30-402-23
Storage Case230 x 130 x 75 mm perforated lid and bottom with hinged lid
30-402-26
Storage Case260 x 150 x 75 mm perforated lid and bottom with hinged lid
30-402-30
Storage Case300 x 200 x 75 mm perforated lid and bottom with hinged lid
30-402-32
Storage Case325 x 275 x 75 mm perforated lid and bottom with hinged lid
30-402-42
Storage Case420 x 175 x 75 mm perforated lid and bottom with hinged lid

SafeMed Industry
Muslim Masjid Street,
Opp Muslim Masjid, Roras Road,
Muzaffar Pur, Sialkot 51310 Pakistan.

Phone: +92 523572570
Mobile: +92 314 726 202
WhatsApp: +92 314 726 202

Website: Safe-Med.Co
E-Mail: Sales@Safe-Med.Co

SAFEMED INSDUSTRY

30-730-00
Vickers
12cm 4 3/4"
K-Wire Dispenser
wire length
10 came
wires 1,0 / 1,2 /
1,4 / 1,6 mm Ø
length of
dispenser 12 cm
with white
plastic cap

30-730-16
Vickers
18.5cm 7 1/4"
K-Wire Dispenser
wire length
16 came
wires 1,0 / 1,2 /
1,4 / 1,6 mm Ø
length of
dispenser 18,5 cm
with white
plastic cap

30-730-31
Vickers
18.5cm 7 1/4"
K-Wire Dispenser
wire length
31 came
wires 1,8 / 2,0 /
2,2 / 2,5 mm Ø
length of
dispenser 18,5 cm
with white
plastic cap

30-731-16
Vickers
34cm 12 1/4
K-Wire Dispenser
wire length
16 came
wires 1,0 / 1,2 /
1,4 / 1,6 mm Ø
length of
dispenser 34 cm
with white
plastic cap

30-731-31
Vickers
34cm 12 1/4
K-Wire Dispenser
wire length 31
came wires 1,8 /
2,0 /
2,2 / 2,5 mm Ø
length of
dispenser 34 cm
with white
plastic cap

SafeMed Industry
Muslim Masjid Street,
Opp Muslim Masjid, Roras Road,
Muzaffar Pur, Sialkot 51310 Pakistan.

Phone: +92 523572570
Mobile: +92 314 726 202
WhatsApp: +92 314 726 202

Website: Safe-Med.Co
E-Mail: Sales@Safe-Med.Co

30-732-08
18.5cm 7 1/4"
K-Wire Dispenser wire length
16 came wires 0,8 mm Ø
length of dispenser with white plastic cap
30-732-10
18.5cm 7 1/4"
K-Wire Dispenser wire length 16
came wires 1,0 mm Ø
length of dispenser with white plastic cap 30-732-12
18.5cm 7 1/4"
K-Wire Dispenser wire length 16
came wires 1,2 mm Ø
length of dispenser with white plastic cap 30-732-14
18.5cm 7 1/4"
K-Wire Dispenser wire length 16
came wires 1,4 mm Ø
length of dispenser with white plastic cap 30-732-15
18.5cm 7 1/4"
K-Wire Dispenser wire length 16
came wires 1,5 mm Ø
length of dispenser with white plastic cap 30-732-16
18.5cm 7 1/4"
K-Wire Dispenser wire length 16
came wires 1,6 mm Ø
length of dispenser with white plastic cap 30-732-18
18.5cm 7 1/4"
K-Wire Dispenser wire length 16
came wires 1,8 mm Ø
length of dispenser with white plastic cap 30-732-20
18.5cm 7 1/4"
K-Wire Dispenser wire length 16
came wires 2,0 mm Ø
length of dispenser with white plastic cap 30-732-22
18.5cm 7 1/4"
K-Wire Dispenser wire length 16
came wires 2,2 mm Ø
length of dispenser with white plastic cap 30-732-25
18.5cm 7 1/4"
K-Wire Dispenser wire length
16 came wires 2,5 mm Ø
length of dispenser with white plastic cap

SafeMed Industry
Muslim Masjid Street,
Opp Muslim Masjid, Roras Road,
Muzaffar Pur, Sialkot 51310 Pakistan.

Phone: +92 523572570
Mobile: +92 314 726 202
WhatsApp: +92 314 726 202

Website: Safe-Med.Co
E-Mail: Sales@Safe-Med.Co

30-734-08
33.5cm 13 1/4K-Wire Dispenser
wire length 31 came wires 0,8 mm
Ø
length of dispenser with white plastic
cap 30-734-10
33.5cm 13 1/4K-Wire Dispenser
wire length 31 came wires 1,0 mm
Ø
length of dispenser with white plastic
cap 30-734-12
33.5cm 13 1/4K-Wire Dispenser
wire length 31 came wires 1,2 mm
Ø
length of dispenser with white plastic
cap 30-734-14
33.5cm 13 1/4K-Wire Dispenser
wire length 31 came wires 1,4 mm
Ø
length of dispenser with white plastic
cap 30-734-15
33.5cm 13 1/4K-Wire Dispenser
wire length 31 came wires 1,5 mm
Ø
length of dispenser with white plastic
cap 30-734-16
33.5cm 13 1/4K-Wire Dispenser
wire length 31 came wires 1,6 mm
Ø
length of dispenser with white plastic
cap 30-734-18
33.5cm 13 1/4K-Wire Dispenser
wire length 31 came wires 1,8 mm
Ø
length of dispenser with white plastic
cap 30-734-20
33.5cm 13 1/4K-Wire Dispenser
wire length 31 came wires 2,0 mm
Ø
length of dispenser with white plastic cap 30-
734-22
33.5cm 13 1/4K-Wire Dispenser wire
length 31 came wires 2,2 mm Ø
length of dispenser with white plastic cap 30-
734-25
33.5cm 13 1/4K-Wire Dispenser wire
length 31 came wires 2,5 mm Ø
length of dispenser with white plastic cap

SafeMed Industry
Muslim Masjid Street,
Opp Muslim Masjid, Roras Road,
Muzaffar Pur, Sialkot 51310 Pakistan.

Phone: +92 523572570
Mobile: +92 314 726 202
WhatsApp: +92 314 726 202

Website: Safe-Med.Co
E-Mail: Sales@Safe-Med.Co

30-805-14
Mayo
14cm 5 1/2"
Safety Pin

30-808-14
Mayo
14cm 5 1/2"
Safety Pin
Safety Pins

SafeMed Industry
Muslim Masjid Street,
Opp Muslim Masjid, Roras Road,
Muzaffar Pur, Sialkot 51310 Pakistan.

Phone: +92 523572570
Mobile: +92 314 726 202
WhatsApp: +92 314 726 202

Website: Safe-Med.Co
E-Mail: Sales@Safe-Med.Co

SAFEMED INSDUSTRY

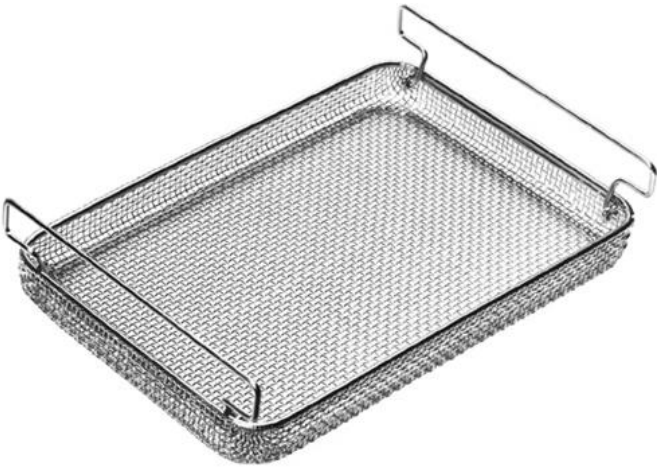

30-808-20
Tray
260 x 170 x 28 mm
wire mesh

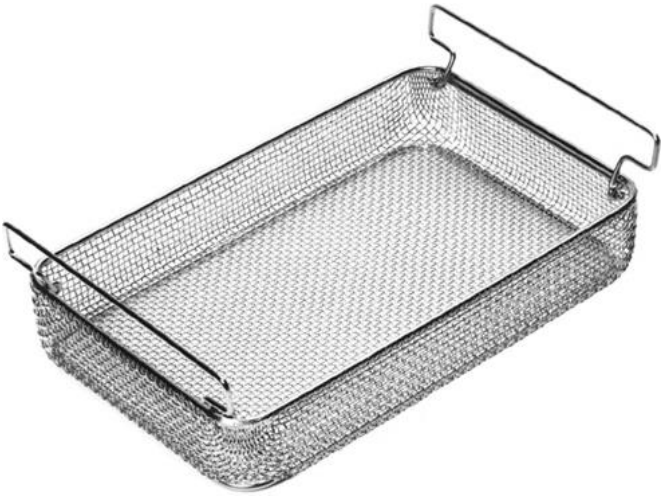

30-808-21
Tray
260 x 170 x 47 mm
wire mesh

30-808-24
Tray
240 x 240 x 50 mm
wire mesh

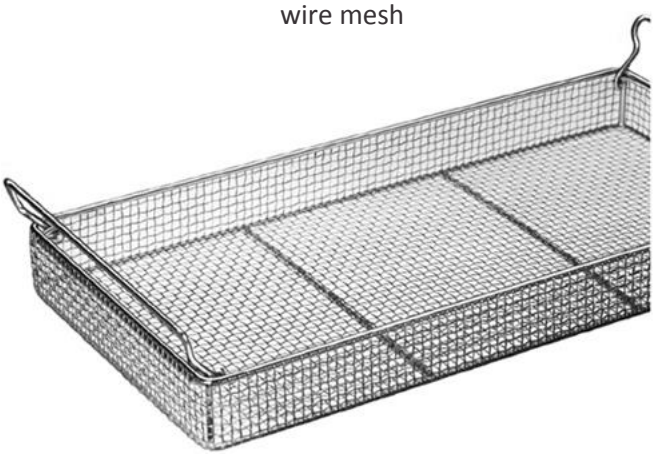

30-808-48
Tray
480 x 240 x 50 mm
wire mesh

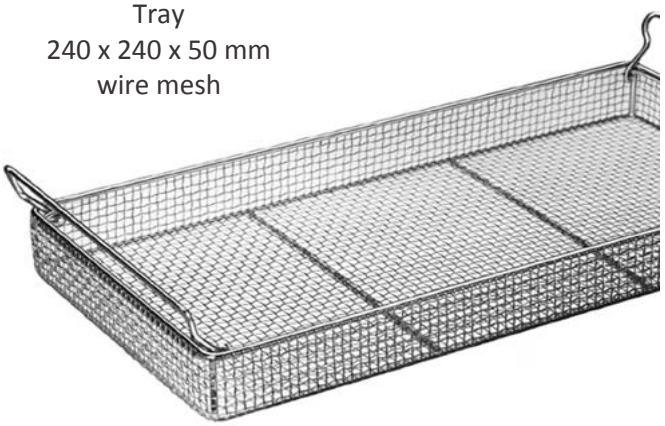

30-808-75
Tray
520 x 240 x 75 mm
wire mesh

SafeMed Industry
Muslim Masjid Street,
Opp Muslim Masjid, Roras Road,
Muzaffar Pur, Sialkot 51310 Pakistan.

Phone: +92 523572570
Mobile: +92 314 726 202
WhatsApp: +92 314 726 202

Website: Safe-Med.Co
E-Mail: Sales@Safe-Med.Co

SAFEMED INSDUSTRY

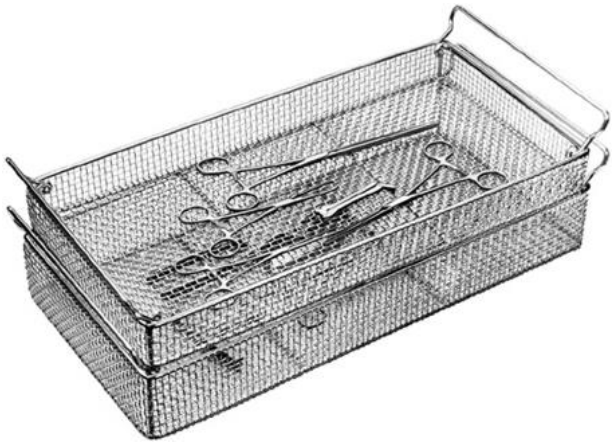

30-808-99
Tray
520 x 240 x 100 mm
wire mesh

30-809-14
Tray
260 x 130 x 50 mm
perforated steel sheet

30-809-15
Tray
280 x 130 x 50 mm
for micro instruments
with silicone inserts and lid
perforated steel sheet

30-809-24
Tray
260 x 260 x 50 mm
perforated steel sheet

30-809-25
Tray
260 x 260 x 50 mm
for micro instruments with silicone inserts and lid perforated steel sheet

SafeMed Industry
Muslim Masjid Street,
Opp Muslim Masjid, Roras Road,
Muzaffar Pur, Sialkot 51310 Pakistan.

Phone: +92 523572570
Mobile: +92 314 726 202
WhatsApp: +92 314 726 202

Website: Safe-Med.Co
E-Mail: Sales@Safe-Med.Co

30-809-48
Tray
480 x 260 x 50 mm
perforated steel sheet

30-809-49
Tray
480 x 260 x 50 mm
for micro instruments
with silicone inserts and lid
perforated steel sheet

30-809-50
Tray
520 x 260 x 50 mm
perforated steel sheet

SafeMed Industry
Muslim Masjid Street,
Opp Muslim Masjid, Roras Road,
Muzaffar Pur, Sialkot 51310 Pakistan.

Phone: +92 523572570
Mobile: +92 314 726 202
WhatsApp: +92 314 726 202

Website: Safe-Med.Co
E-Mail: Sales@Safe-Med.Co

30-890-15
Sterilizing Basket
600 x 300 x 130 mm

30-890-30
Sterilizing Basket
600 x 300 x 260 mm

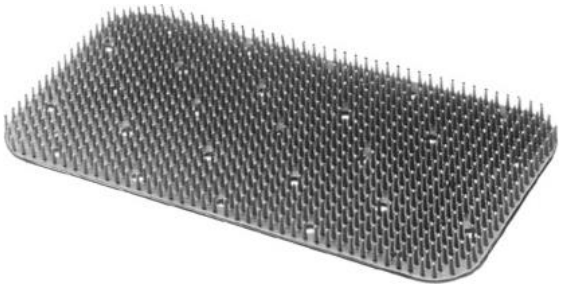

30-999-91
Silicone Mat for
container 300 x 150 mm

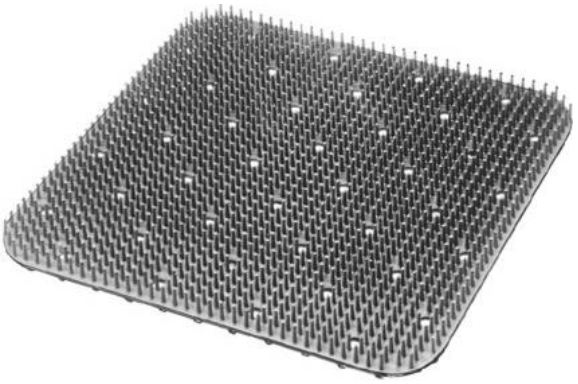

30-999-92
Silicone Mat for
container 300 x 300 mm

30-999-93
Silicone Mat for
tray 260 x 260 mm

SafeMed Industry
Muslim Masjid Street,
Opp Muslim Masjid, Roras Road,
Muzaffar Pur, Sialkot 51310 Pakistan.

Phone: +92 523572570
Mobile: +92 314 726 202
WhatsApp: +92 314 726 202

Website: Safe-Med.Co
E-Mail: Sales@Safe-Med.Co