SafeMed Industry
Diagnostics

Percussion Hammer
Buck
08-155-18 7
1/4"
with needle and brush

Percussion Hammer
Buck
08-156-18 8"
with needle and brush telescope
handle

SafeMed Industry
Muslim Masjid Street,
Opp Muslim Masjid, Roras Road,
Muzaffar Pur, Sialkot 51310 Pakistan.

Phone: +92 523572570
Mobile: +92 314 726 202
WhatsApp: +92 314 726 202

Website: Safe-Med.Co
E-Mail: Sales@Safe-Med.Co

Percussion Hammer
Dejerine
08-184-20 8"

Percussion Hammer
Dejerine
08-185-21 8
1/4"
with needle

SafeMed Industry
Muslim Masjid Street,
Opp Muslim Masjid, Roras Road,
Muzaffar Pur, Sialkot 51310 Pakistan.

Phone: +92 523572570
Mobile: +92 314 726 202
WhatsApp: +92 314 726 202

Website: Safe-Med.Co
E-Mail: Sales@Safe-Med.Co

Percussion Hammer
Taylor Mod. USA
08-190-20 8"

Pinwheel
Wattenberg
08-210-19 7"

SafeMed Industry
Muslim Masjid Street,
Opp Muslim Masjid, Roras Road,
Muzaffar Pur, Sialkot 51310 Pakistan.

Phone: +92 523572570
Mobile: +92 314 726 202
WhatsApp: +92 314 726 202

Website: Safe-Med.Co
E-Mail: Sales@Safe-Med.Co

Stethoscope
Pinard
08-242-18 7"

Stethoscope
Pinard
08-248-15 6"

SafeMed Industry
Muslim Masjid Street,
Opp Muslim Masjid, Roras Road,
Muzaffar Pur, Sialkot 51310 Pakistan.

Phone: +92 523572570
Mobile: +92 314 726 202
WhatsApp: +92 314 726 202

Website: Safe-Med.Co
E-Mail: Sales@Safe-Med.Co

SAFEMED INSDUSTRY

Stethoscope
Duplex
08-260-00
head diameter 47 mm

Stethoscope
Duplex-Baby
08-262-00
head diameter 37 mm

Stethoscope
Anastrophe
08-265-00
head diameter 47 mm

SafeMed Industry
Muslim Masjid Street,
Opp Muslim Masjid, Roras Road,
Muzaffar Pur, Sialkot 51310 Pakistan.

Phone: +92 523572570
Mobile: +92 314 726 202
WhatsApp: +92 314 726 202

Website: Safe-Med.Co
E-Mail: Sales@Safe-Med.Co

Dynamometer
Martin-
Vaporimeter 08-
400-01
complete with 3 rubber bulbs and
manometer in plastic box

Spare Rubber Ball
08-400-05
set with 3 sizes

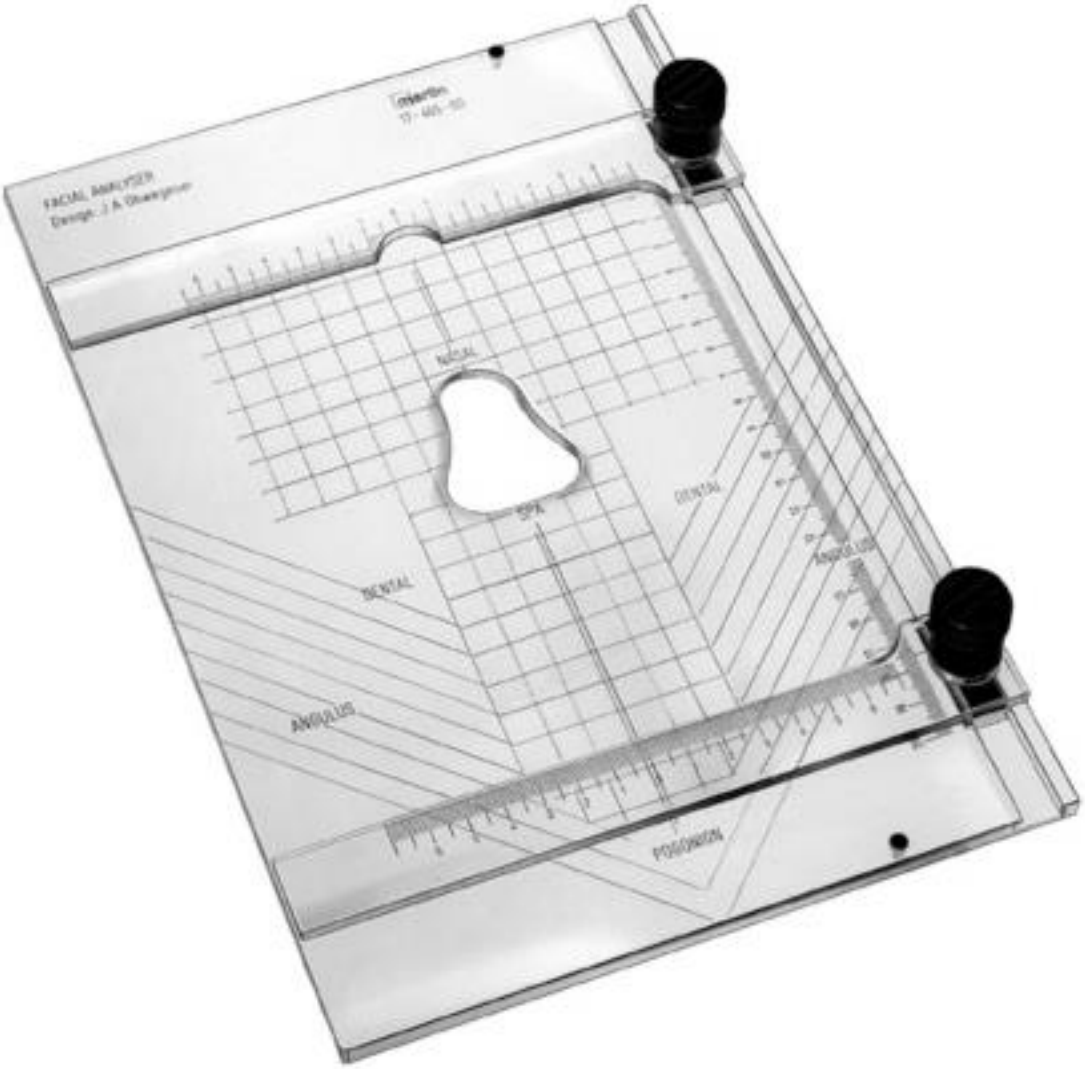

Facial Analyzer
Wegener 08-
405-00

Caliper
Jameson
08-407-01

Finger Goniometer
Carroll
08-408-01 5
3/4"

Caliper
Townley
08-409-01 4
1/2"
graduated in mm and inches

SafeMed Industry
Muslim Masjid Street,
Opp Muslim Masjid, Roras Road,
Muzaffar Pur, Sialkot 51310 Pakistan.

Phone: +92 523572570
Mobile: +92 314 726 202
WhatsApp: +92 314 726 202

Website: Safe-Med.Co
E-Mail: Sales@Safe-Med.Co

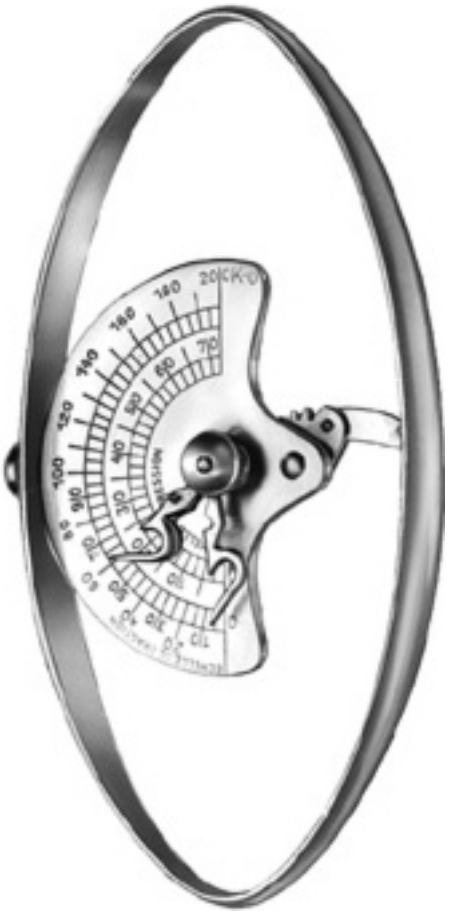

Dynamometer
Collin
08-410-02 4
1/4"
graduated in kg, for adults

Dynamometer
Collin
08-410-03 4
1/4"
graduated in lbs, for adults

SafeMed Industry
Muslim Masjid Street,
Opp Muslim Masjid, Roras Road,
Muzaffar Pur, Sialkot 51310 Pakistan.

Phone: +92 523572570
Mobile: +92 314 726 202
WhatsApp: +92 314 726 202

Website: Safe-Med.Co
E-Mail: Sales@Safe-Med.Co

Fluxmeter
Molten
08-414-01
for extremities

Caliper
08-415-21
measuring range up to 200 mm

SafeMed Industry
Muslim Masjid Street,
Opp Muslim Masjid, Roras Road,
Muzaffar Pur, Sialkot 51310 Pakistan.

Phone: +92 523572570
Mobile: +92 314 726 202
WhatsApp: +92 314 726 202

Website: Safe-Med.Co
E-Mail: Sales@Safe-Med.Co

Caliper
08-417-00 9"
measuring range up to 145 mm

SafeMed Industry
Muslim Masjid Street,
Opp Muslim Masjid, Roras Road,
Muzaffar Pur, Sialkot 51310 Pakistan.
Phone: +92 523572570
Mobile: +92 314 726 202
WhatsApp: +92 314 726 202
Website: Safe-Med.Co
E-Mail: Sales@Safe-Med.Co

Ruler
08-418-15 6
1/2"
measuring range up to 150 mm

Ruler
08-418-20 8
3/4"
measuring range up to 200 mm

Ruler
08-418-30 12
1/2
measuring range up to 300 mm

Ruler
08-418-50 20
3/4
measuring range up to 500 mm

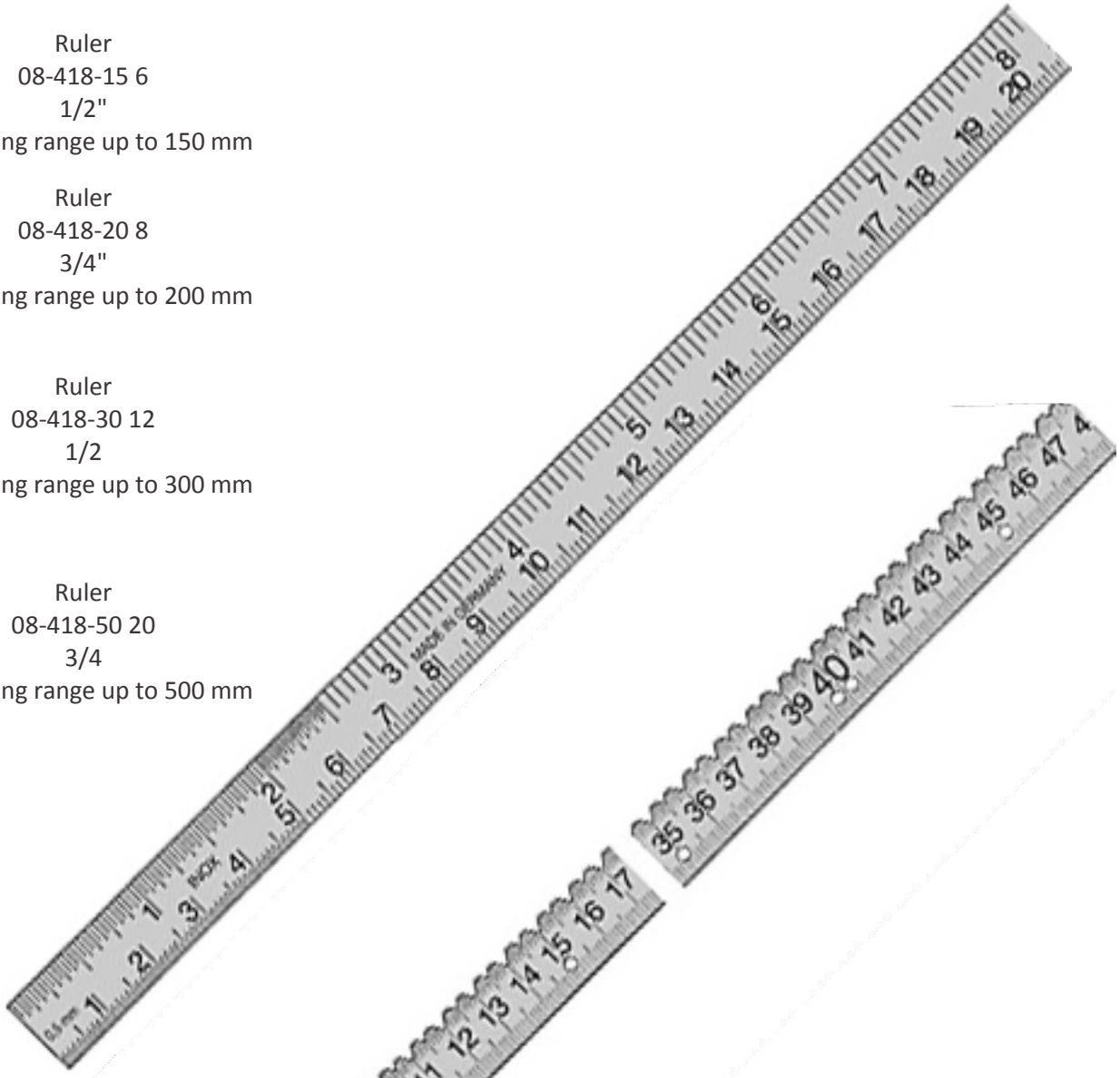

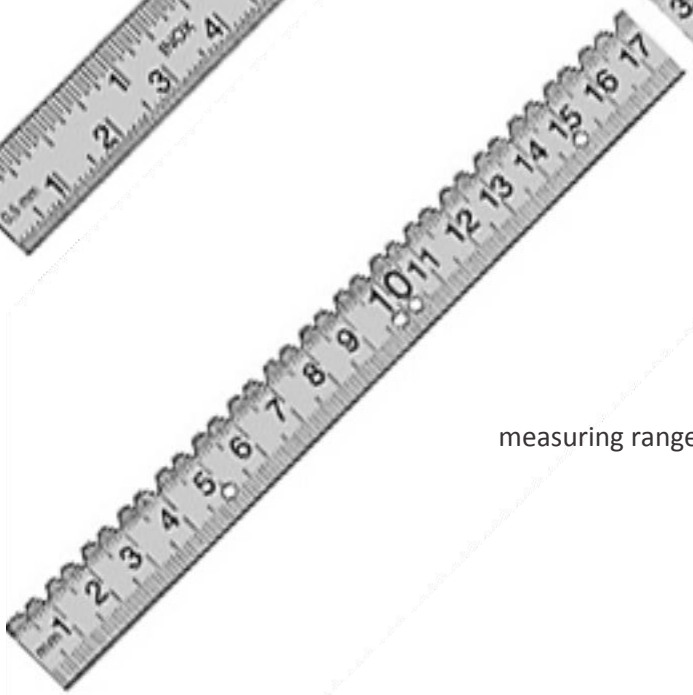

Ruler, X-Ray
08-419-50
20 3/4
measuring range up to 500 mm one side notched

SafeMed Industry
Muslim Masjid Street,
Opp Muslim Masjid, Roras Road,
Muzaffar Pur, Sialkot 51310 Pakistan.

Phone: +92 523572570
Mobile: +92 314 726 202
WhatsApp: +92 314 726 202

Website: Safe-Med.Co
E-Mail: Sales@Safe-Med.Co

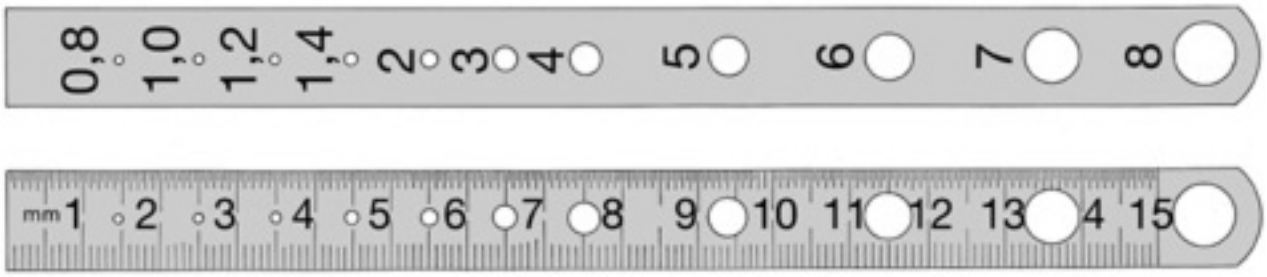

Ruler
08-422-15 6
1/2"
measuring range up to 150 mm with hole gauge

Tape Measure, steel
08-425-15
59"
graduated in cm and inches

Tape Measure, steel
08-427-15
59"
graduated in cm and inches

SafeMed Industry
Muslim Masjid Street,
Opp Muslim Masjid, Roras Road,
Muzaffar Pur, Sialkot 51310 Pakistan.

Phone: +92 523572570
Mobile: +92 314 726 202
WhatsApp: +92 314 726 202

Website: Safe-Med.Co
E-Mail: Sales@Safe-Med.Co

SAFEMED INSDUSTRY

Otoscope Set
08-440-02
complete,
in cafetal myoscope continuously
adjustable with illumination lens and
battery handle

Ear Speculum 08-440-03 Grey disposable 4 mm Ø	Ear Speculum 08-440-04 Black reusable 2 mm Ø	Ear Speculum 08-440-05 Black reusable 3 mm Ø	Ear Speculum 08-440-06 Black reusable 4 mm Ø	Ear Speculum 08-440-07 Black reusable 5 mm Ø

SafeMed Industry
Muslim Masjid Street,
Opp Muslim Masjid, Roras Road,
Muzaffar Pur, Sialkot 51310 Pakistan.

Phone: +92 523572570
Mobile: +92 314 726 202
WhatsApp: +92 314 726 202

Website: Safe-Med.Co
E-Mail: Sales@Safe-Med.Co

Spare Bulb
08-440-08
halogen 2,5 V for otoscope 17-440-02

Spare Bulb
08-440-09
halogen 2,5 V for ophthalmoscope 14-442-03

SafeMed Industry
Muslim Masjid Street,
Opp Muslim Masjid, Roras Road,
Muzaffar Pur, Sialkot 51310 Pakistan.

Phone: +92 523572570
Mobile: +92 314 726 202
WhatsApp: +92 314 726 202

Website: Safe-Med.Co
E-Mail: Sales@Safe-Med.Co

Battery Handle
08-440-10
for diagnostic sets 08-440-01 / 08-442-03 + 08-443-03

Ear Speculum
08-440-11
greydisposable2,5 mm Ø

SafeMed Industry
Muslim Masjid Street,
Opp Muslim Masjid, Roras Road,
Muzaffar Pur, Sialkot 51310 Pakistan.

Phone: +92 523572570
Mobile: +92 314 726 202
WhatsApp: +92 314 726 202

Website: Safe-Med.Co
E-Mail: Sales@Safe-Med.Co

Ophthalmoscope
Set 08-442-03
complete, in case

08-442-04
complete, in case

SafeMed Industry
Muslim Masjid Street,
Opp Muslim Masjid, Roras Road,
Muzaffar Pur, Sialkot 51310 Pakistan.

Phone: +92 523572570
Mobile: +92 314 726 202
WhatsApp: +92 314 726 202

Website: Safe-Med.Co
E-Mail: Sales@Safe-Med.Co

Diagnostic Set
08-443-03
complete, in case

SafeMed Industry
Muslim Masjid Street,
Opp Muslim Masjid, Roras Road,
Muzaffar Pur, Sialkot 51310 Pakistan.

Phone: +92 523572570
Mobile: +92 314 726 202
WhatsApp: +92 314 726 202

Website: Safe-Med.Co
E-Mail: Sales@Safe-Med.Co

Head Mirror
Ziegler
DI-08-450-09
with head band 17-471-01
without protection
cap90 mm Ø

Head Mirror
Ziegler
DI-08-451-09
with head band 17-471-01
with protection
cap90 mm Ø

SafeMed Industry
Muslim Masjid Street,
Opp Muslim Masjid, Roras Road,
Muzaffar Pur, Sialkot 51310 Pakistan.

Phone: +92 523572570
Mobile: +92 314 726 202
WhatsApp: +92 314 726 202

Website: Safe-Med.Co
E-Mail: Sales@Safe-Med.Co

Head Mirror
Ziegler
08-452-09
with head band 17-471-01
with protection
cap90 mm Ø

Head Mirror
Ziegler
DI-08-453-09
with head band 17-471-01
with protection
cap90 mm Ø

SafeMed Industry
Muslim Masjid Street,
Opp Muslim Masjid, Roras Road,
Muzaffar Pur, Sialkot 51310 Pakistan.

Phone: +92 523572570
Mobile: +92 314 726 202
WhatsApp: +92 314 726 202

Website: Safe-Med.Co
E-Mail: Sales@Safe-Med.Co

Mirror
Ziegler
08-455-09
only with protection cap 90 mm
Ø

Mirror
Ziegler
08-456-09
only without protection cap 90 mm
Ø

SafeMed Industry
Muslim Masjid Street,
Opp Muslim Masjid, Roras Road,
Muzaffar Pur, Sialkot 51310 Pakistan.

Phone: +92 523572570
Mobile: +92 314 726 202
WhatsApp: +92 314 726 202

Website: Safe-Med.Co
E-Mail: Sales@Safe-Med.Co

Head Band
08-471-01
black fiber, with ball joint24 mm wide

Head Band
Martin-Commode
08-472-01
white plastic, with ball joint24 mm wide

Head Band
Martin-Commode
08-473-01
broad shape white plastic, with ball joint

SafeMed Industry
Muslim Masjid Street,
Opp Muslim Masjid, Roras Road,
Muzaffar Pur, Sialkot 51310 Pakistan.

Phone: +92 523572570
Mobile: +92 314 726 202
WhatsApp: +92 314 726 202

Website: Safe-Med.Co
E-Mail: Sales@Safe-Med.Co

Socket Joint
08-475-01
ref. 17-471-01 –17-473-01

Fiber Optic Head Lamp
08-501-02
complete adjustable,
focusing from 20 to 150 mm
with fiber optic cable, 1,8 m long

Lamp Housing
08-501-21
only focusing

SafeMed Industry
Muslim Masjid Street,
Opp Muslim Masjid, Roras Road,
Muzaffar Pur, Sialkot 51310 Pakistan.

Phone: +92 523572570
Mobile: +92 314 726 202
WhatsApp: +92 314 726 202

Website: Safe-Med.Co
E-Mail: Sales@Safe-Med.Co

Fiber Optic Cable	Head Band
08-501-25	08-501-30
only1,8 m	only

SafeMed Industry
Muslim Masjid Street,
Opp Muslim Masjid, Roras Road,
Muzaffar Pur, Sialkot 51310 Pakistan.

Phone: +92 523572570
Mobile: +92 314 726 202
WhatsApp: +92 314 726 202

Website: Safe-Med.Co
E-Mail: Sales@Safe-Med.Co

Head Lamp
Orion
08-503-22
white Commode head band, with plug,3 m cable220 V

Head Lamp
Orion
08-504-22
white Commode head band, with shock proof plug,3 m cable220 V

SafeMed Industry
Muslim Masjid Street,
Opp Muslim Masjid, Roras Road,
Muzaffar Pur, Sialkot 51310 Pakistan.

Phone: +92 523572570
Mobile: +92 314 726 202
WhatsApp: +92 314 726 202

Website: Safe-Med.Co
E-Mail: Sales@Safe-Med.Co

Head Lamp
Clar
08-517-04
complete4 V

Head Lamp
Clar
08-517-06
complete6 V

SafeMed Industry
Muslim Masjid Street,
Opp Muslim Masjid, Roras Road,
Muzaffar Pur, Sialkot 51310 Pakistan.

Phone: +92 523572570
Mobile: +92 314 726 202
WhatsApp: +92 314 726 202

Website: Safe-Med.Co
E-Mail: Sales@Safe-Med.Co

Glass Mirror
DI-08-518-01
without socket 55 mm Ø

Head Lamp
Clar
08-523-04
complete large,
white Commode
head band4 V

Head Lamp
Clar
08-523-06
complete large,
white Commode
head band6 V

Head Lamp
Clar
08-524-04
consisting of cable,
socket and mirror4 V

Head Lamp
Clar
08-524-06
consisting of cable,
socket and mirror6 V

SafeMed Industry
Muslim Masjid Street,
Opp Muslim Masjid, Roras Road,
Muzaffar Pur, Sialkot 51310 Pakistan.

Phone: +92 523572570
Mobile: +92 314 726 202
WhatsApp: +92 314 726 202

Website: Safe-Med.Co
E-Mail: Sales@Safe-Med.Co

Reflector Glass
Clar
08-525-01
without socket 100 mm Ø

Mini Transformer
08-578-01
continuously
adjustable from 0 to 10 volt
220 V

SafeMed Industry
Muslim Masjid Street,
Opp Muslim Masjid, Roras Road,
Muzaffar Pur, Sialkot 51310 Pakistan.

Phone: +92 523572570
Mobile: +92 314 726 202
WhatsApp: +92 314 726 202

Website: Safe-Med.Co
E-Mail: Sales@Safe-Med.Co

Head Loupe
08-610-00
binocular, adjustable Commode head band,
free working distance up to 40 cm approx.,
magnifying power 1,8 x

Head Band
08-610-01

SafeMed Industry
Muslim Masjid Street,
Opp Muslim Masjid, Roras Road,
Muzaffar Pur, Sialkot 51310 Pakistan.
Phone: +92 523572570
Mobile: +92 314 726 202
WhatsApp: +92 314 726 202
Website: Safe-Med.Co
E-Mail: Sales@Safe-Med.Co

Magnifying Glass
08-625-50
bi-convex metal handle,
magnifying power 2,5 x50 mm Ø

Magnifying Glass
08-627-75
bi-convex plastic handle,
magnifying power 2,5 x75 mm Ø

SafeMed Industry
Muslim Masjid Street,
Opp Muslim Masjid, Roras Road,
Muzaffar Pur, Sialkot 51310 Pakistan.

Phone: +92 523572570
Mobile: +92 314 726 202
WhatsApp: +92 314 726 202

Website: Safe-Med.Co
E-Mail: Sales@Safe-Med.Co

Head Loupe
Berger, Mod. Martin
08-640-01
binocular exchangeable lenses, metal head band magnifying power 2,5 x

Head Loupe
Berger
08-640-02
binocular exchangeable lenses, hinged housing magnifying power 2,5 x

SafeMed Industry
Muslim Masjid Street,
Opp Muslim Masjid, Roras Road,
Muzaffar Pur, Sialkot 51310 Pakistan.

Phone: +92 523572570
Mobile: +92 314 726 202
WhatsApp: +92 314 726 202

Website: Safe-Med.Co
E-Mail: Sales@Safe-Med.Co

Frame for Lenses
Berger
08-645-15
binocular, free working distance 220 mm = 4 Diop. Magnifying power 1,5 x for ref. 17-640-00 +17-640-02

Frame for Lenses
Berger
08-645-20
binocular, free working distance 170 mm = 5,5 Diop. Magnifying power 2 x for ref. 17-640-00 + 17-640-03

Frame for Lenses
Berger
08-645-25
binocular, free working distance 130 mm = 7 Diop. Magnifying power 2,5 x for ref. 17-640-00 + 17-640-04

Frame for Lenses
Berger
08-645-30
binocular, free working distance 100 mm = 8,5 Diop. Magnifying power 3 x for ref. 17-640-00 + 17-640-05

SafeMed Industry
Muslim Masjid Street,
Opp Muslim Masjid, Roras Road,
Muzaffar Pur, Sialkot 51310 Pakistan.

Phone: +92 523572570
Mobile: +92 314 726 202
WhatsApp: +92 314 726 202

Website: Safe-Med.Co
E-Mail: Sales@Safe-Med.Co

Blood Lancets
Secure
08-690-00

SafeMed Industry
Muslim Masjid Street,
Opp Muslim Masjid, Roras Road,
Muzaffar Pur, Sialkot 51310 Pakistan.

Phone: +92 523572570
Mobile: +92 314 726 202
WhatsApp: +92 314 726 202

Website: Safe-Med.Co
E-Mail: Sales@Safe-Med.Co

Alcohol Dispenser
Alco spend
08-747-25
250 came with pressure lock, alcohol impermeable

Spare Bottle
Alco spend
08-749-25

SafeMed Industry
Muslim Masjid Street,
Opp Muslim Masjid, Roras Road,
Muzaffar Pur, Sialkot 51310 Pakistan.

Phone: +92 523572570
Mobile: +92 314 726 202
WhatsApp: +92 314 726 202

Website: Safe-Med.Co
E-Mail: Sales@Safe-Med.Co

Tourniquet
Press fix
08-801-01
textile band with metal fittings30 mm wide

Spare Bandage
Press fix
08-801-02
30 mm wide

Compression Bandage
Esmarch
08-802-01 5
6 cm wide, 5 m long

Compression Tube
Esmarch
08-802-02
with chain1 m long

SafeMed Industry
Muslim Masjid Street,
Opp Muslim Masjid, Roras Road,
Muzaffar Pur, Sialkot 51310 Pakistan.

Phone: +92 523572570
Mobile: +92 314 726 202
WhatsApp: +92 314 726 202

Website: Safe-Med.Co
E-Mail: Sales@Safe-Med.Co

SAFEMED INSDUSTRY

Campimeter
08-805-00
complete
with two cuffs and pump
measuring range
700 mm HG

Cuff
08-805-01
type A, for upper arm
560 x 95 mm

Cuff
08-805-02
type B, for thigh
950 x 130 mm

Spare Pump
08-805-03

Manometer
08-805-04

SafeMed Industry
Muslim Masjid Street,
Opp Muslim Masjid, Roras Road,
Muzaffar Pur, Sialkot 51310 Pakistan.

Phone: +92 523572570
Mobile: +92 314 726 202
WhatsApp: +92 314 726 202

Website: Safe-Med.Co
E-Mail: Sales@Safe-Med.Co

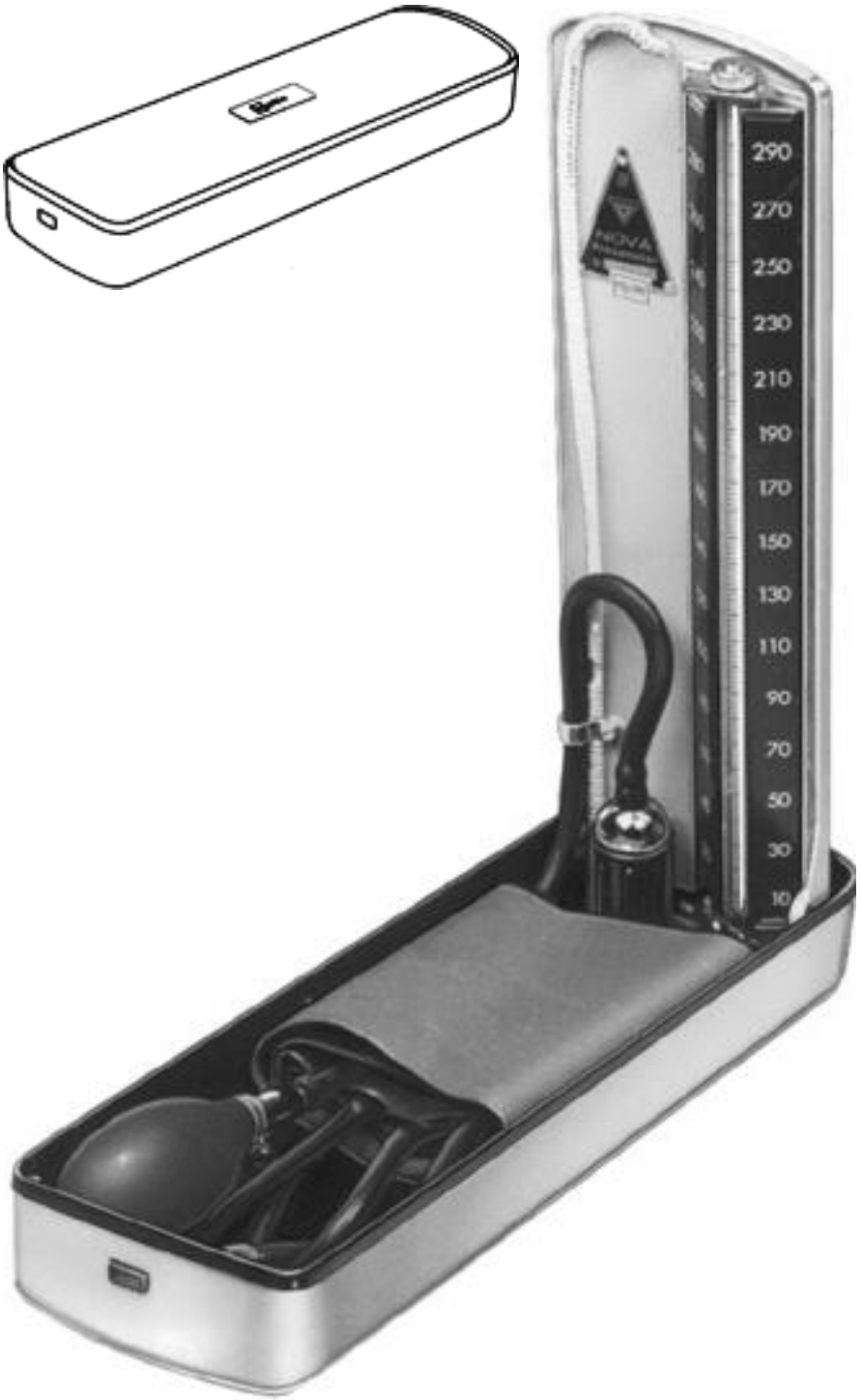

Blood Pressure Manometer
08-962-00
calibrated
with Velcro cuff mercury tube 300 mm

Blood Pressure Manometer
08-966-00
non-calibrated
with Velcro cuff mercury tube 300 mm

SafeMed Industry
Muslim Masjid Street,
Opp Muslim Masjid, Roras Road,
Muzaffar Pur, Sialkot 51310 Pakistan.

Phone: +92 523572570
Mobile: +92 314 726 202
WhatsApp: +92 314 726 202

Website: Safe-Med.Co
E-Mail: Sales@Safe-Med.Co

Blood Pressure Manometer
08-976-00
non-calibrated with Velcro cuff with manometer

SafeMed Industry
Muslim Masjid Street,
Opp Muslim Masjid, Roras Road,
Muzaffar Pur, Sialkot 51310 Pakistan.

Phone: +92 523572570
Mobile: +92 314 726 202
WhatsApp: +92 314 726 202

Website: Safe-Med.Co
E-Mail: Sales@Safe-Med.Co

Velcro Cuff
08-982-00

Velcro Cuff
08-983-05

Manometer
08-984-00
Manometer with rubber bulb

SafeMed Industry
Muslim Masjid Street,
Opp Muslim Masjid, Roras Road,
Muzaffar Pur, Sialkot 51310 Pakistan.

Phone: +92 523572570
Mobile: +92 314 726 202
WhatsApp: +92 314 726 202

Website: Safe-Med.Co
E-Mail: Sales@Safe-Med.Co

SAFEMED INSDUSTRY

Blood Pressure Manometer
08-994-00
wall mounted with Velcro cuff mercury tube 300 mm

SafeMed Industry
Muslim Masjid Street,
Opp Muslim Masjid, Roras Road,
Muzaffar Pur, Sialkot 51310 Pakistan.

Phone: +92 523572570
Mobile: +92 314 726 202
WhatsApp: +92 314 726 202

Website: Safe-Med.Co
E-Mail: Sales@Safe-Med.Co